PROFESSIONAL JOURNAL ON PRECISION ENGINEERING

μ MIKRONIEK

ISSUE 1
2017
(VOL. 57)

- CONTROL OF **AUTONOMOUS, SELF-DRIVING VEHICLES**
- **ROYAL VISIT** TO LIS
- FUTURE OF **UK PRECISION**
- **SUBMICRON** PRECISION THROUGH **HYDROSTATICS**

Mikroniek is a publication of the DUTCH SOCIETY FOR PRECISION ENGINEERING www.dspe.nl

DSPE

PUBLICATION INFORMATION

Objective
Professional journal on precision engineering and the official organ of DSPE, the Dutch Society for Precision Engineering. Mikroniek provides current information about scientific, technical and business developments in the fields of precision engineering, mechatronics and optics.
The journal is read by researchers and professionals in charge of the development and realisation of advanced precision machinery.

60th anniversary DSPE YOUR PRECISION PORTAL

Publisher
DSPE
High Tech Campus 1, 5656 AE Eindhoven
PO Box 80036, 5600 JW Eindhoven
info@dspe.nl, www.dspe.nl

Editor
Hans van Eerden, hans.vaneerden@dspe.nl

Advertising canvasser
Gerrit Kulsdom, Sales & Services
+31 (0)229 – 211 211, gerrit@salesandservices.nl

Design and realisation
Drukkerij Snep, Eindhoven
+31 (0)40 – 251 99 29, info@snep.nl

Subscription costs

The Netherlands	€ 70.00 (excl. VAT) per year
Europe	€ 80.00 (excl. VAT) per year
Outside Europe	€ 70.00 + postage (excl. VAT) per year

Mikroniek appears six times a year.

ISSN 0026-3699

The main cover photo (featuring the royal visit to the Leiden Instrument Makers School) is courtesy of LiS. Read the article on page 16 ff.

IN THIS ISSUE

ISSUE 1
2017

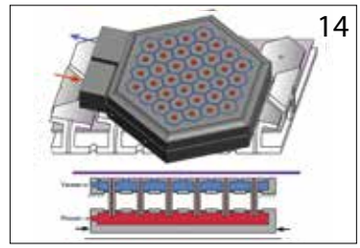

FEATURES

THE FUTURE? LESS COCOONING, MORE FUN!

(Photo: Krystyna Janusz)

As a departing member of the DSPE advisory board, I have the honour of writing this editorial on my vision of the future of precision engineering and DSPE. After almost 40 active years as a mechatronic engineer in design, development, management, university education and research, a very personal drive made me go back to the audio world, which was some 40 years ago the source* of the mechatronic expertise that I have used so well during my career.

When looking back, so many things have changed over these 40 years and so has NVPT/DSPE. I must confess to having been a critical member of the advisory board and I often addressed the risk of over-ambition, but even the most ambitious plans have been achieved, of which the DSPE board can be proud. With this fulfilment of plans, I am struggling to think of something that could be improved for the future, but my changeover to the audio scene has provided a topic, as it appears that hardly any of the recent developments in precision engineering have reached this large field of technology, other than through its products, the semiconductors.

Precision engineering has become more multidisciplinary and several certified courses focus on broadening the scope of engineers to become real mechatronic engineers. This level of multidisciplinary skill is scarcely found in the highly electronic audio world, but to be honest, only a limited number of mechatronic precision engineers really internalise other technology domains outside their mainly mechanical roots. For mechatronic engineers, the internalisation of multiple disciplines like electronics or optics is a prerequisite for success in modern precision engineering design. While a real need exists for these skills, 'cocooning' in one's own specialised domain is a serious risk in fulfilling the needs of industry in the future.

In view of the DSPE initiatives for dedicated courses like the Summer school Opto-Mechatronics, I wonder if it is possible for DSPE to become even more active in stimulating this aspect through dedicated actions. Of course, the challenge is how to achieve this. For internalising knowledge like electronics, one should practise on real hardware, sufficiently connected to mechatronic systems to acquire applicable experience and ignite real interest. Furthermore, it is even better when the hardware can be taken home afterwards to further internalise the technology by experimenting.

In my view it would be wonderful if DSPE could mobilise its members to initiate and co-fund such practical courses with dedicated hardware in cooperation with course providers. No one will be surprised if I suggest letting them design their own feedback-controlled loudspeaker including PWM amplifier. It is really fun and highly instructive!

Rob Munnig Schmidt
RMS Acoustics & Mechatronics
rob@rmsmechatronics.nl

** The role of audio technology as a source of inspiration for the design of Philips/ASML's first electric waferstage is nicely described in the book "NatLab – Kraamkamer van ASML, NXP en de cd" (in Dutch) by Paul van Gerven and René Raaijmakers.*

DRIVERLESS, CONTROL-INTENSIVE

Autonomous and self-driving vehicles require the application of advanced control algorithms. Although this control technology may seem domain-specific at first sight, it shares many commonalities with classical applications in precision engineering in terms of design principles and solution strategies. Here, the control design for trajectory tracking of a self-driving shuttle is described, combining modelling, system identification, and advanced nonlinear control laws. This design has been validated by physical measurements conducted on the WEpod driverless shuttle, which operates in public traffic in the Netherlands.

DRAGAN KOSTIĆ, REMCO DE LANGE, HUGO VAN DEN BRAND, KOEN LEKKERKERKER, FLORIS GAISSER, PIETER JONKER, RIENDER HAPPEE AND JAN WILLEM VAN DER WIEL

Introduction

Autonomous public transportation is receiving increasing attention in the Netherlands and abroad. Examples of self-driving vehicles already in operation include the Rotterdam Rivium shuttle bus and the Heathrow shuttles in London, but such vehicles operate on dedicated lanes. On the other hand, in the Dutch Province of Gelderland, for the first time in the world, self-driving shuttles, called WEpods, are now being tested on public roads.

On the initiative of the Province of Gelderland, Delft University of Technology and several companies have been running the innovative WEpods pilot project with an aim of realising the first application of automated driving vehicles in mixed traffic on public roads in the Netherlands. The goal of the project is to use existing infrastructure with no or very limited adjustments or additions to this infrastructure. The WEpod vehicles (Figure 1) are designed to drive fully autonomously and have no steering wheel. They can, however, drive in semi-autonomous and manual modes when needed.

1 *WEpod driverless shuttle.*

AUTHORS' NOTE

Dragan Kostić (high-tech architect), Remco de Lange (mechatronics engineer), and Hugo van den Brand (mechatronics engineer) work for Sogeti High Tech, based in Vianen, the Netherlands.
Koen Lekkerkerker (software engineer) and Floris Gaisser (software engineer) work for Robot Care Systems, based in The Hague, the Netherlands.
Pieter Jonker (professor Intelligent Vehicles & Cognitive Robotics) and Riender Happee (Programme Manager Automotive) work at the 3mE department BioMechanical Engineering of Delft University of Technology, the Netherlands.
Jan Willem van der Wiel (project manager) works for Spring innovation management, based in Son, the Netherlands.

dragan.kostic@sogeti.com
www.sogeti.nl/expertises/high-tech
www.3me.tudelft.nl
www.robotcaresystems.com
www.spring-innovation.nl

Automated driving in mixed traffic is a very complex and safety-critical matter. That is why the WEpods project is split in several work packages, each focusing on a particular aspect of relevance for automated driving. One of these work packages is High Level Control (HLC), which is in charge of the control of the vehicle and ensures the safety of the passengers and the other road users. Besides fully autonomous functions, HLC also enables a manual control function in which a steward can manually modify the speed and lateral position of the vehicle by means of a joystick. The presence of the steward is required to obtain permission to drive the shuttles on public roads.

At the request of Delft University of Technology, Sogeti Nederland has been involved in the development and implementation of HLC. In collaboration with other project partners, Sogeti has developed manual, semi-autonomous and autonomous modes for the vehicle control. Each mode has been implemented in the embedded control software and successfully tested on the physical vehicle in different traffic scenarios. In this paper we describe the control design process and report on the test results.
In the next part we introduce the WEpod vehicle and briefly explain the position of the HLC in the overall system architecture. After that we present the vehicle model and system identification results that serve as a basis for the control design. This is followed by a description of the HLC laws. The quality of these laws is demonstrated by the test results. Concluding remarks are included in the last section.

WEpod system architecture

The WEpod vehicle is an upgrade of the EZ10, a driverless electric shuttle designed to cover short distances and

predefined routes in multi-use environments. The original EZ10 vehicles were developed by French company EasyMile [1]. The WEpods consortium has equipped these vehicles with additional technical equipment, such as cameras, lasers, GPS-RTK, and LIDAR to better detect and interpret the surroundings and enable safe autonomous driving [2]. The WEpod has six seats for passengers and one for a steward.

The functional system architecture of the WEpod shuttle is depicted in Figure 2. In this architecture, the HLC has a central position, since it is in charge of the control of the vehicle and ensures the safety of the passengers and the other road users. It executes the planned path by performing trajectory control and object following when a slower object is in front of the vehicle. It predicts if other road users intersect with the vehicle's trajectory and performs collision avoidance by braking. The HLC directly interfaces with the low-level control (LLC) functions of the vehicle through the vehicles CAN bus. It also reads this bus and sends relevant vehicle states to the risk assessment system. The LLC is directly responsible for actuation of the vehicle forward speed and steering.

WEpod vehicles run under surveillance of a control room with a human operator who has a permanent overview of the vehicle condition and the traffic situation around the vehicle. The operator can communicate with people inside and outside the vehicle.

Vehicle modelling

The motion equations of the vehicle are based on the reduced nonlinear single-track model [3], see Figure 3. In this model, pairs of wheels at the front and rear axles are lumped together into single equivalent front and rear wheels depicted by dashed lines in Figure 3. Another assumption is that the front and rear steering angles are of equal amplitude but opposite in the steering direction, which leads to the counter-steering driving mode also depicted in Figure 3.

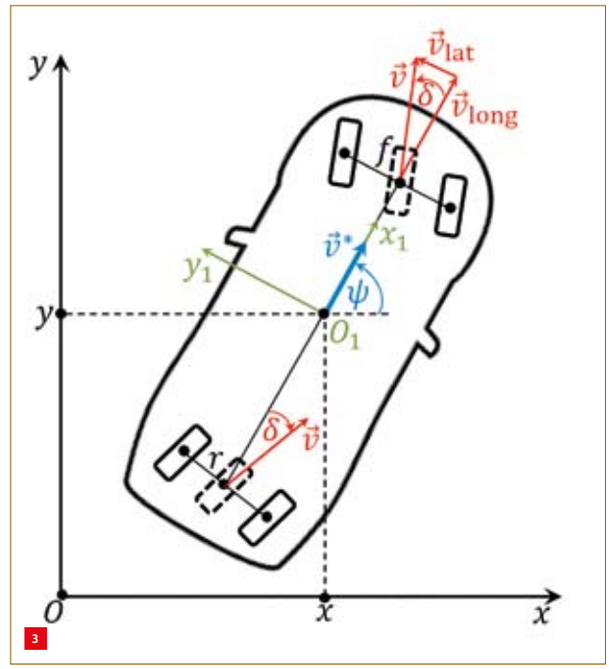

With reference to Figure 3, the vehicle position in the global coordinate frame Oxy is defined by Cartesian coordinates x and y and the heading angle ψ. The low-level control (LLC) inputs to the WEpod vehicle are the speed of tyres v and the steering angle δ. Here, v is magnitude of the tyres speed vector $\vec{v}$ shown in Figure 3, $v = |\vec{v}|$. For the sake of vehicle high-level control (HLC), it is required to establish a relation between the vehicle coordinates x, y and ψ and the inputs v and δ. For this, we consider obvious trigonometric relations between the vehicle Cartesian speeds $\dot{x}$ and $\dot{y}$ and the translational vehicle speed $\vec{v}^*$:

$$\dot{x} = v^* \cos(\psi)$$
$$\dot{y} = v^* \sin(\psi) \qquad (1)$$

Here:

$$v^* = |\vec{v}^*| = \sqrt{(\dot{x}^2 + \dot{y}^2)} \qquad (2)$$

The vehicle angular speed ω^* is determined by the time-derivative of the heading angle:

$$\omega^* = \dot{\psi} \qquad (3)$$

The objective of the HLC is to find the vehicle inputs v and δ that let the vehicle travel along the reference trajectory supplied by the path planner, see Figure 2:

$$x(t) \to x_r(t); \quad y(t) \to y_r(t); \quad \psi(t) \to \psi_r(t) \qquad (4)$$

Here, t denotes time. By inspecting Figure 3, it is obvious that $\vec{v}^* = \vec{v}_{long}$ where $\vec{v}_{long}$ is the longitudinal component of

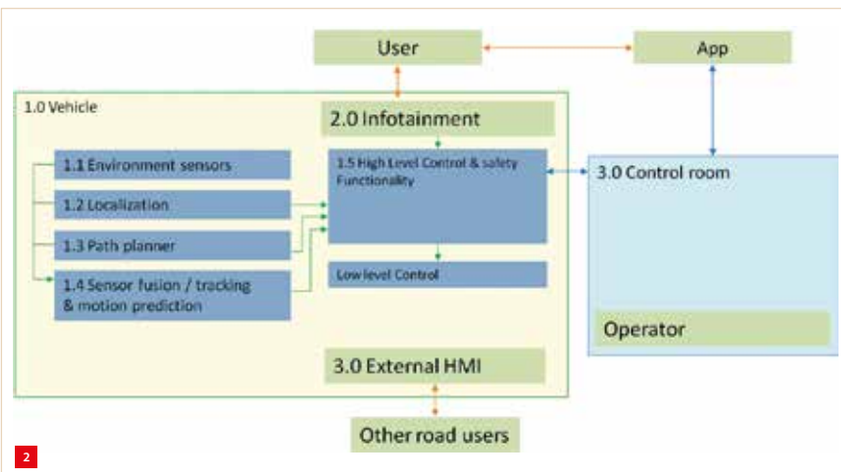

2 *Functional system architecture of the WEpod vehicle.*

3 *Kinematics of the single-track vehicle model with counter-steering.*

the tyres speed vector $\vec{v}$. As well, it is straightforward to deduce the following trigonometric relationship:

$$v^* = |\vec{v}_{\text{long}}| = v\cos(\delta) \tag{5}$$

In the counter-steering driving mode, the vehicle midpoint O_1 shown in Figure 3 represents the actual centre of rotation of the vehicle with an angular speed ω^* given by (3). That is why we can establish the following relationship between the lateral component $\vec{v}_{\text{lat}}$ of the tyres speed vector $\vec{v}$ and ω^*:

$$|\vec{v}_{\text{lat}}| = v\sin(\delta) = l\omega^* \tag{6}$$

Here, l is a distance between O_1 and the front and rear axles f and r, respectively.

Finally, using (1), (5), and (6), we can record the model which relates v and δ with the vehicle coordinates:

$$\dot{x} = v\cos(\delta)\cos(\psi)$$

$$\dot{y} = v\cos(\delta)\sin(\psi)$$

$$\dot{\psi} = v\frac{\sin(\delta)}{l} \tag{7}$$

In addition to the nonlinear kinematics of the vehicle (7), HLC should take into account closed-loop dynamics of the LLC for v and δ. These dynamics are captured by means of system identification. For illustration, in Figure 4 we show the frequency response measurement (FRF) for the LLC loop of the steering angle. This FRF plot reveals a control bandwidth of 2 Hz, which is sufficient for vehicle steering in urban areas with speed limits up to 30 km/h.

Vehicle control

As mentioned in the previous section, the HLC laws should compute inputs v and δ to the vehicle model (7) such that the vehicle coordinates follow their setpoint profiles (4) as accurately as possible at all speeds, while keeping the system robust against disturbances. For the sake of safety, the control laws have to generate bounded control signals under all circumstances and independent of differences between the reference and actual values of the vehicle coordinates. As indicated in Figure 2, the setpoint profiles are supplied by the path planner, based on the current position. This position is supplied by the localisation system for path planning and HLC.

In the following, we describe the HLC laws that have been developed by Sogeti and implemented in WEpod vehicles. These laws have been constructed on the basis of trajectory tracking controllers for the wheeled vehicles of unicycle kinematics that were already designed in [4]. In the following, we only explain customisation of the controllers from [4] for application to WEpod vehicles in the counter-steering driving mode.

In Figure 5 we show a unicycle vehicle together with its coordinates and trajectory tracking errors. In this figure, we denote the same vehicle coordinates x, y and ψ as in Figure 3. Cartesian coordinates are related to each other via model (1), while the angular coordinate is subject to model (3). With the reference to Figure 5, we first express the trajectory tracking errors for x and y first in the global coordinate frame Oxy:

4 *Measured FRF of dynamics of the low-level steering control loop.*

5 *Coordinates and trajectory tracking errors of a vehicle of unicycle kinematics.*

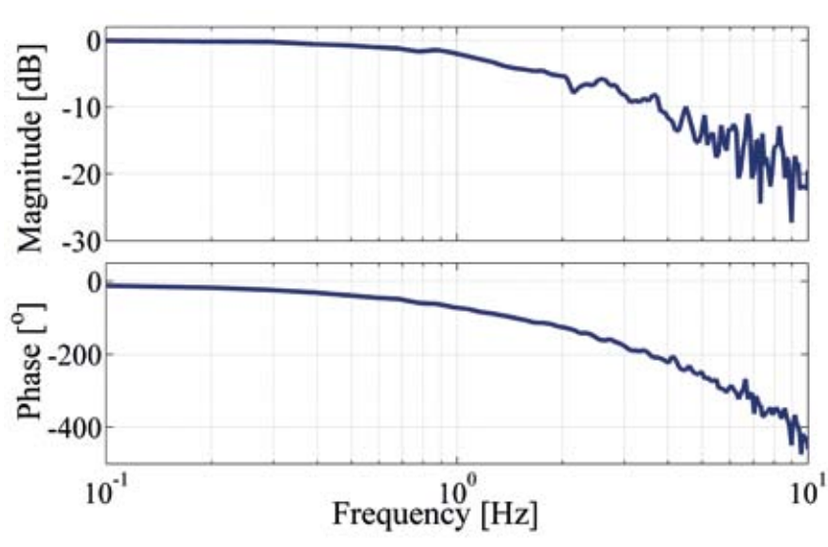

4

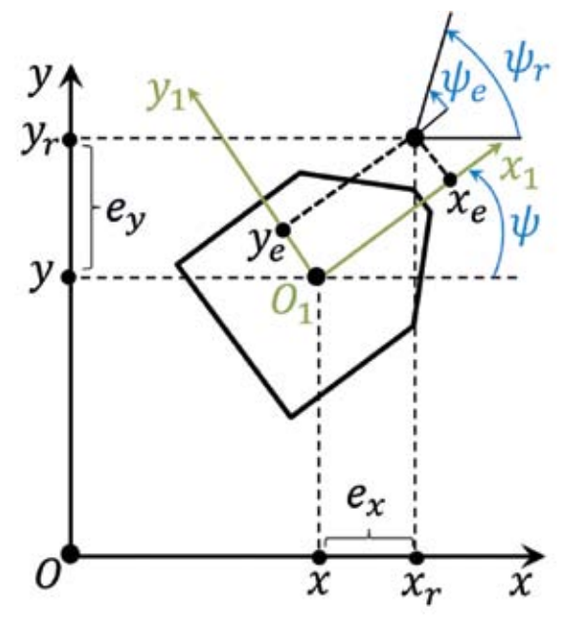

5

$$\begin{bmatrix} e_x \\ e_y \end{bmatrix} = \begin{bmatrix} x_r - x \\ y_r - y \end{bmatrix} \tag{8}$$

Then we can map these errors to the vehicle coordinate frame $O_1x_1y_1$:

$$\begin{bmatrix} x_e \\ y_e \end{bmatrix} = \begin{bmatrix} \cos(\psi) & \sin(\psi) \\ -\sin(\psi) & \cos(\psi) \end{bmatrix} \begin{bmatrix} e_x \\ e_y \end{bmatrix} \tag{9}$$

The tracking error for the angular coordinate of the unicycle, depicted in Figure 5, is defined as follows:

$$\psi_e = \psi_r - \psi \tag{10}$$

The control laws from [4] have the following form:

$$v^*(t) = v_r^*(t)\cos(\psi_e(t)) + r_x \tanh(k_x x_e(t)) \tag{11a}$$

$$\omega^*(t) = \omega_r^*(t) + k_y v_r^*(t) \frac{\sin(\psi_e(t))}{\psi_e(t)} y_e(t) \cdot \sqrt{\frac{c}{1+c(e_e(t))^T e_e(t)}} + r_\psi \tanh(k_\psi \psi_e(t)) \tag{11b}$$

Here, r_x, r_ψ, k_x, k_y, c and k_ψ are scalar design parameters, tanh(.) denotes the hyperbolic tangent function, while v_r^* and ω_r^* represent the reference forward and angular speeds of the unicycle vehicle, respectively. It can be observed that each term in laws (11a,b) is a bounded function and constrained to the limits set by its coefficients.
Because of this, laws (11a,b) guarantee global convergence of the tracking errors $x_e(t) \to 0$, $y_e(t) \to 0$, and $\psi_e(t) \to 0$ under constraints on the inputs:

$$|v^*(t)| \le v^*_{max} \text{ and } |\omega^*(t)| \le \omega^*_{max}.$$

In other words, both control signals $v^*(t)$ and $\omega^*(t)$ can be subject to limits without compromising robust convergence of the tracking errors. This property is also very valuable for safe and robust HLC of the WEpod, since it enables safe vehicle steering towards the reference trajectory, independent of the actual values of the tracking errors.
To turn the trajectory tracking control laws (11a,b) for the unicycle into the equivalent HLC laws for the WEpod, we make use of equations (5) and (6). For $v \neq 0$, from (5) and (6) it is straightforward to find the HLC laws:

$$\delta(t) = \text{atan}\left(\frac{l\omega^*(t)}{v^*(t)}\right) \tag{12a}$$

$$v(t) = \frac{v^*(t)}{\cos(\delta(t))} \tag{12b}$$

Here, atan(.) is the inverse of the tangent function, while (11a) and (11b) are used for $v^*(t)$ and $\omega^*(t)$, respectively.

Performance of the described HLC laws is tested on the physical vehicle. In Figure 6 we show the reference path of the WEpod vehicle during the test. Since this path is driven in the counter-clockwise direction, it starts at $(x,y) = (0,0)$. In Figure 7 we show the trajectory tracking errors expressed relative to the vehicle coordinate frame $O_1x_1y_1$.

By inspection of these errors, the following observations can be made:

1. The tracking error in the longitudinal vehicle direction (x_e) features an outlier of 0.7 m, which is caused by an unrealistic jump in the feedback signal supplied by the localisation system. Although it is necessary to improve quality of the localisation, stability of the vehicle trajectory tracking control is not hampered thanks to the saturated nature of control laws (11a,b);
2. With an exception of the outlier, the tracking error in the longitudinal vehicle direction remains within an acceptable band of $|x_e| \le 0.21$ m;
3. The tracking errors in the lateral direction (y_e) and in the heading angle (ψ_e) are increased at the sharp corners of the reference path. At these corners these errors remain within bands of $|y_e| \le 0.4$ m and $|\psi_e| \le 8°$ that are also acceptable; along the straight-line segments of the vehicle path, the tracking error is even better: $|y_e| \le 0.2$ m and $|\psi_e| \le 2°$.

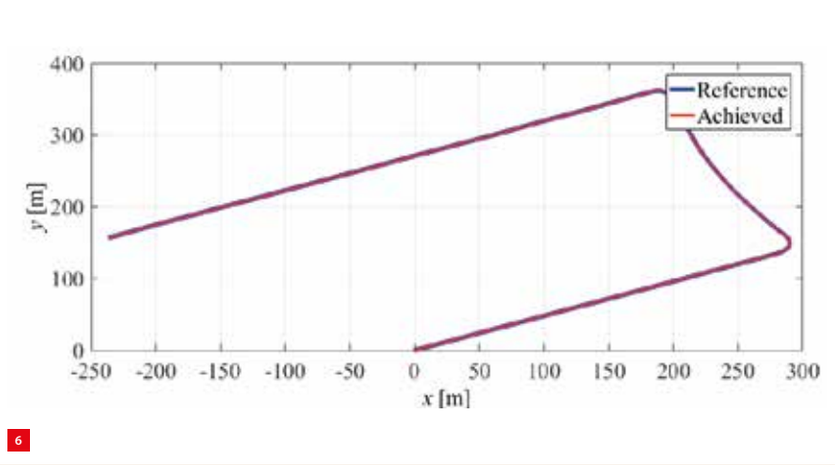

6

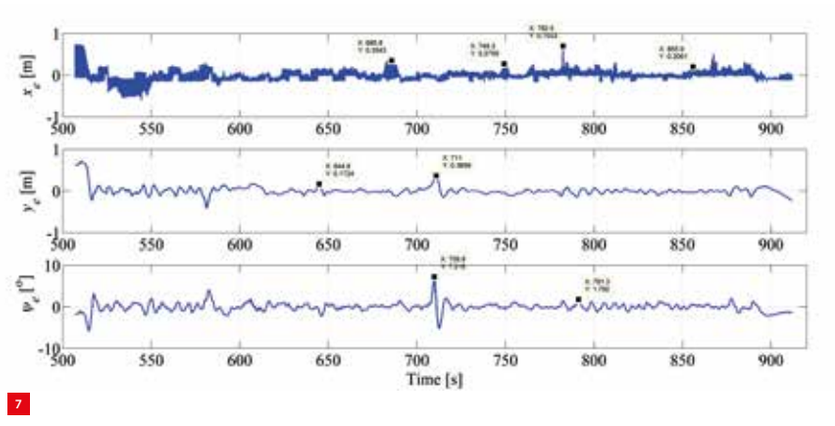

7

6 *Reference and achieved vehicle paths during testing of the trajectory tracking control performance of HLC laws.*

7 *Trajectory tracking errors in the vehicle coordinate frame, as defined by equations (9) and (10), achieved during testing of the trajectory tracking control performance of the HLC; the peak errors are caused by sensor noise.*

Conclusion

The outstanding property of the control laws developed by Sogeti with project partners, and implemented in the high-level control software of the WEpod vehicle, is that they achieve global asymptotic convergence of the tracking errors under constraints on the maximum allowed vehicle forward and angular speeds.
In other words, both input speeds can be subject to limits without compromising robust convergence of the tracking errors. This property is very important for safe control of the vehicle, because as a result of this, the vehicle can safely and automatically be steered to the reference trajectory independent of the actual values of the tracking errors. Even if the vehicle is initially far away from the reference path, the control laws guarantee stability and asymptotic convergence of the tracking errors. This property is very valuable for safe and robust trajectory tracking.

The WEpods are now being extensively tested with a steward on board. In the 'Interregional Automated Transport' project we aim to enhance and improve safety to such a level that driverless shuttles obtain permission to drive on public roads with supervision only by a control room. This will require rigorous on-road and virtual testing of sensing and control, as well as the evaluation of acceptance by and intuitive interaction with other road users.

Our current focus is on improving performance of the localisation system by means of sensor fusion and Kalman filtering. Furthermore, cooperative vehicle control functions, such as platooning, will be developed, implemented and tested on WEpods. There is also an ambition to deploy similar control strategies on other types of self-driving vehicles, such as cars and busses. ■

REFERENCES

[1] EZ10, the driverless shuttle, easymile.com
[2] www.wepods.com/about-wepods
[3] R. Rajamani, *Vehicle Dynamics and Control*, Springer US, 2012.
[4] D. Kostić, S. Adinandra, J. Caarls, N. van de Wouw, H. Nijmeijer, "Collision-free Tracking Control of Unicycle Mobile Robots", *Proc. IEEE Conf. Dec. Control*, pp. 5667-5672, Shanghai, China, 2009.

CONSIDERATIONS IN CHOOSING A 5-AXIS MACHINE

The coming years will see increasingly stringent requirements for component accuracy and surface quality with a growing demand for higher functionality, which translates into greater complexity and the use of more sophisticated materials that don't generally lend themselves to machining. So all the more reason to pay careful attention to the machine's design the next time you invest in a five-axis machining centre, because that literally is the foundation of what is feasible.

JAN OONK

The above-mentioned vision was illustrated during the Verspanen 2020 (Machining 2020) seminar, recently organised by Mikrocentrum in Veldhoven, the Netherlands. This scenario will come as no surprise to most entrepreneurs operating in the machining sector. Aside from the requirements mentioned above, we must not lose sight of productivity, which is a significant driver of international competition.
That makes it ever more important to look at the machine's build and the qualities associated with it when purchasing a new machining centre. Because regardless of whether it is about accuracy, productivity or reliability, the machine is, in all cases, the primary component and is largely determinative of what is feasible. Another crucial aspect is the capability to control temperature and vibrations – the biggest culprits that undermine the milling process.

The best results are obviously achieved when a machine is built to specifications for a specific product and the applicable requirements. Because volume machining a large aluminium component requires different specifications than milling a titanium component, where accuracy and a perfect finish are required. A machine that can meet all milling requirements is unfortunately an illusion, as Willem van Dam made clear in his presentation at Verspanen 2020. Different markets require

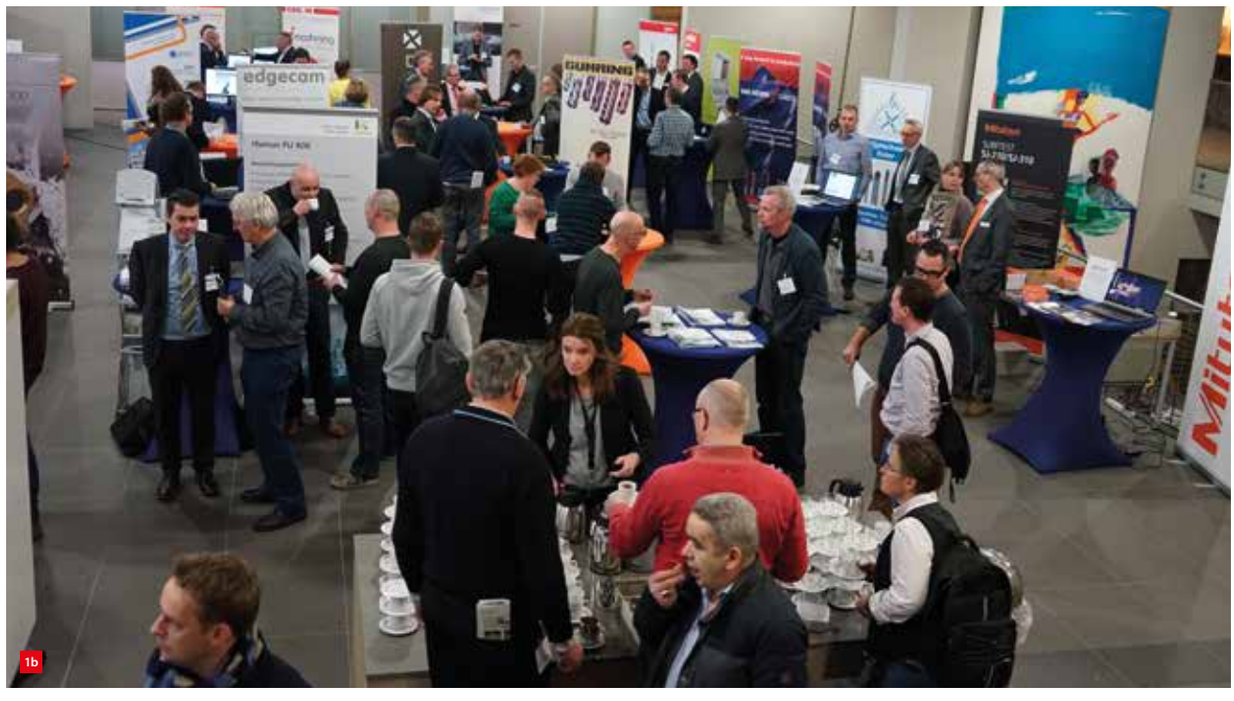

1 *Impression of the Verspanen 2020 seminar.*
(a) The exhibition. (Photo courtesy of Mikrocentrum)
(b) Presentation by Willem van Dam of Dymato.

AUTHOR'S NOTE

Jan Oonk is a freelance journalist at Oonk Tekstbureau voor Industrie en Techniek. He writes about technology and the machine and metal industry.
This article was written at the request of Dymato, supplier of various leading brands of metalworking machines, headquartered in Veenendaal, the Netherlands. The Belgian magazine Metallerie will publish a Dutch-language version of this article.

info@janoonk.nl
www.dymato.nl

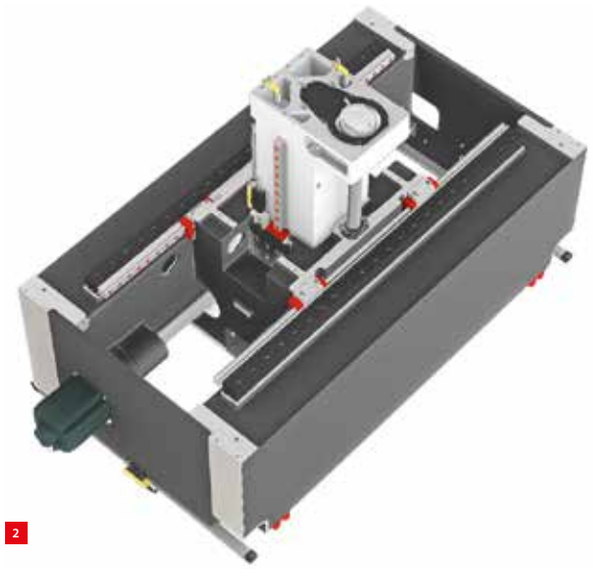

different solutions, according to the area sales manager for machine importer Dymato. In its approach to the market, Dymato draws a distinction between universal machining, high-speed milling and large workpiece machining.

Universal machining centre

As mentioned above, the best quality-returns combination is achieved when a machining centre is programmed to perform a specific machining operation. In practice, however, a supplier can rarely dedicate a machine to a specific task or a set of similar machining operations. Because there is usually a great diversity of products, materials and operations involved, cost considerations tend to favour a universal machine. An all-rounder that delivers the best average results across the board. But even then, it is important to conduct a critical assessment of the capabilities.

Where the width of the machining range is concerned, a portal structure is the most appropriate solution, according to Van Dam (Figure 2). Structurally, the symmetrical design of this machine offers the best capabilities for controlling the forces and temperature effects (thermo-symmetrical design). In a five-axis model, these machines can be equipped with pan/tilt tables. Fitted with direct-drive motors, both the A and C axes can be controlled quickly and with high precision due to the lack of worm gears.

A good example of universal machining centres is the series of Hyundai Wia machines in the Dymato program. In the newest five-axis machining centre, the XF6300, the bed and column are made from a single mono-block piece (Figure 3) to ensure maximum stiffness and accuracy. This is additionally reinforced by the fact that the mono-block frame encloses the A axis motors. The X and Y axes are designed to the box-in-box principle, ensuring a mechanical and thermo-symmetrical design with high stiffness in that respect as well.

Direct measuring systems on linear and rotary axes as well as angle encoders ensure that all remaining temperature effects on the machine frame are effectively eliminated. This way, according to Van Dam, a positioning accuracy of 5 µm and surface roughness of about R_a = 0.5 µm are also feasible on a universal machine (Figure 4). The XF6300 is available with three different spindles (15,000 / 24,000 / 40,000 rpm), so as to offer the most customer-specific solution possible (Figure 5).

2 *The portal version offers the best capabilities structurally to achieve a symmetrical design, with effective control of forces and temperature effects. The box-in-box principle of the X and Y axes also contributes to this.*

3 *The mono-block structure, where the frame is made from a single piece, results in a high degree of stiffness and stability. Especially since the A axis motors are completely enclosed by the frame.*

4 *A positioning accuracy of 5 µm and surface roughness of about R_a = 0.5 µm are feasible on the Hyundai Wia XF6300 machining centre.*

5 *Because the Hyundai Wia XF6300 is available with three different spindles, it brings a customer-specific model of a universal machine that much closer within reach.*

HSC milling

When hard materials are to be machined with fine structures and small radii (which are automatically subject to high accuracy requirements), it is impossible for machining operators to avoid HSC (High Speed Cutting) machines. A special example of this is the series of Röders machines in the Dymato program. Because of the (thermo-)symmetrical properties, Röders uses a portal structure, where the spindle carries out the transverse and vertical movement (Y and Z axes), and the bed with an integrated pan/tilt table carries out the longitudinal movement (X axis). As the portal with the spindle does not need to move, according to this concept, it can be constructed more robustly to ensure maximum machine stiffness (Figure 6). To compensate for the weight of the Z axis, frictionless vacuum bellows are used.

All the critical elements in the Röders machines are also actively cooled, particularly the spindle and the drives with their magnets and motors. Both the ball bearings and spindle housing are cooled; in the latter case this is done to prevent heat radiation to the column. The machines come with a total of eight separate cooling circuits. The spindle length is additionally monitored by an external (and cooled) eddy-current sensor to prevent deformations caused by mechanical forces. This is especially relevant at high speeds.

To prevent vibrations, only uses linear drives are used. Because they do not come with mechanical contacts, linear drives provide much higher dynamics and better damping than traditional ball screws. The absence of mechanical contacts means less heat development and zero wear and tear.

The hydrostatic guideways are even more efficient in terms of accuracy. Röders uses these in its RHP series, machines that combine milling with coordinate grinding. This combination not only saves an additional logistical operation but also grinding time: because rechucking is not required, it is possible to mill much closer to the final size.

Race Cut

Röders' newest RXP501DS machining centre (Figure 7) achieves a maximum speed of 60,000 rpm. Higher speed not only means that finer tools can be used, but also lower cutting forces are produced, ensuring higher accuracy, a smoother surface and limited vibration. The knife cuts both ways!

What sets the Röders machines apart is their capability to combine high accuracy with high dynamics, thanks to the Race Cut control function, which allows the user to utilise the machines' capabilities to the fullest extent possible. This is only possible because the machine manufacturer develops its own RMS 6 control software, as the software developers must of course know what gears the machine structure allows without compromising accuracy and surface quality. Thanks to Race Cut, the pull can be set at a higher level to allow the machines to brake later and harder and accelerate faster than the conventional CAM programs suggest. This results in processing times that are reduced by more than 20 percent on average.

Large workpieces

A separate market segment is the volume machining of large workpieces, including components for the aerospace industry, where machining from solid carbide alloy is frequently a

6 *Because the portal with the spindle in Röders' machining centres does not need to move, it can be constructed more robustly to ensure maximum stiffness.*

7 *Röders' newest RXP501DS machining centre reaches a maximum speed of 60,000 rpm, making it possible to work with finer tools and lower cutting forces.*

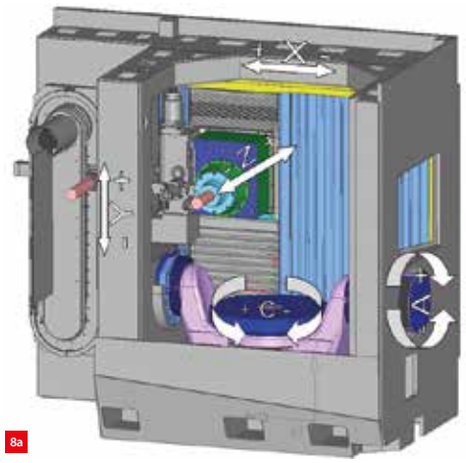

8a

8b

8 *A horizontal model is preferred for machining large volumes due to better chip flow. (a) Schematic of the different axes, including horizontal spindle (Z axis). (b) Horizontal model in the HBZ Trunnion 80.*

9 *Thanks to the different spindles that the Handtmann HBZ Trunnion 80 can be equipped with, the machine can be programmed for machining aluminium, steel and titanium.*

requirement. Often, no less than 90 percent of the material must be milled, which requires higher machine productivity. Here, too, high demands are placed on the stiffness of the machine frame, especially from the perspective of dynamics. According to Dymato's Willem van Dam, a horizontal model is the obvious choice for volume machining due to better chip flow (Figure 8). Tilting the spindle will result in high machining capacity without problems arising from accumulating chips.

An example of machining centres that are ideal for volume machining are the Handtmann A-Punkt Automation machines in the Dymato program. Despite its compact design, the newest machine, the HBZ Trunnion 80, is able to absorb significant forces thanks to the 'Power Cube' frame. The machine offers great flexibility in the choice of spindle, allowing the machine to be programmed for machining aluminium, steel and titanium (Figure 9). Effective processing parameters are available for every situation without having to look for a compromise. This is, in fact, the secret to a milling process that is controlled in all respects.

5-tier pyramid

While the machine may be one of the fundamental pillars in achieving the best possible machining process in terms of accuracy and productivity, it is not the only important factor. When it comes to obtaining the best results possible, it is the interaction of all parameters which makes the machining process more efficient. Mikrocentrum, organiser of the Verspanen 2020 seminar, attributes that interaction to the '5-tier pyramid': machine, tools, chucking, programming and cooling lubricants. When top performance is required, the smallest details will play a role in every aspect of machining. Different iterations of all these came up during the seminar. To further strengthen cooperation and knowledge sharing with the metalworking industry, Mikrocentrum will organise, on 10 and 11 October of this year, a new knowledge and networking event under the title 'Metaal 2017' (Metal 2017).

www.metaal2017.nl

9

POTENTIAL AND CHALLENGES FOR FUTURE APPLICATIONS

Motivated by the success of the first workshop in 2015, DSPE and GMM (the VDE/VDI-Society for Microelectronics, Microsystems and Precision Engineering) are inviting again to Düsseldorf, Germany, for the Gas Bearing Workshop 2017. Presentations, posters and an exhibition provide an inspiring atmosphere for networking and knowledge exchange on the potential and the challenges for future applications of the core enabling technology of gas bearings.

DSPE and GMM have been working for a long time in related fields and in 2012 started an ongoing process for cooperation. In 2015, experts from both societies discussed the possibilities of cooperation in the field of gas bearings.

Core enabling technology

Gas bearings are a core enabling technology in high-precision metrology and manufacturing. In Europe, the leading expertise is located in Germany, the Netherlands and Belgium – a perfect starting position for cooperation on organising the Gas Bearing Workshop (GBW). As a forum for the gas bearing community, the GBW is therefore held at the central location of Düsseldorf (see Figure 1).

Even though Dutch-German cooperation in the field of precision engineering and optics has been established by some companies, a specific international forum for this technology was still lacking. The GBW was established successfully in 2015. It brought together manufacturers/vendors, customers/purchasers and scientists in the field of gas bearing technology.

The GBW is a one-day workshop with lectures illuminating all aspects of this technology. Leading experts from industry and scientific research present relevant advances and findings. In the first GBW in 2015, it was demonstrated that the Netherlands, Belgium and Germany have a broad and deep competence in the understanding, technological development and practical application of gas bearings (see Figure 2).
In 2017, leading companies and institutes will again present their results, which are inspiring for the whole gas bearing

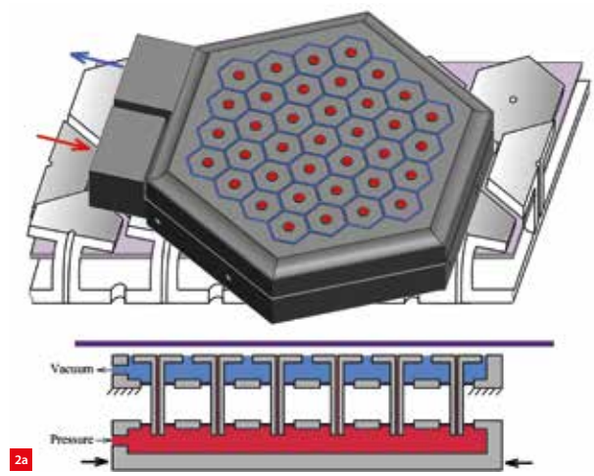

1 *Düsseldorf is centrally located for a Belgian-Dutch-German meeting.*

2 *The Flowerbed gas bearing actuator presented at the GBW 2015 by Ron van Ostayen from Delft University of Technology, the Netherlands. (a) Design. (b) Demonstration.*

community. Besides the lectures there is ample time and opportunity for personal contacts. The forum character of the GBW is going to be expanded by the presentation of posters and an exhibition of components and set-ups.

Programme

After an opening speech by Wolfram Runge (Beuth Hochschule für Technik Berlin), chairman of the day, and words of welcome by Eelco van der Eijk, Technical Scientific Attaché at the Consulate-General of the Netherlands in Düsseldorf, the keynote speech will be delivered by Henny Spaan, CEO of IBS Precision Engineering (see below).

Five more lectures will be delivered:

- Christoph Hahm & René Theska (Technische Universität Ilmenau):
  "Concrete Based Parts with Replicated Air Bearing Path Ways"
- Jack van der Sanden (ASML Research):
  "Air bearing modeling in slip flow regime"
- Bradley Engel (PI (Physik Instrumente), LP):
  "Air Bearings in Semiconductor Metrology"
- Marius Nabuurs (KU Leuven):
  "Tilting pad air bearings for high speed applications"
- Michael Mayer (Robert Bosch GmbH):
  "Gas Bearings – Potential and Challenges for Future Bosch Products"

Between these there is a panel discussion (see below) and breaks are filled with poster presentations and a table-top exhibition.

Keynote

Henny Spaan of IBS, based in Eindhoven, the Netherlands, will present the keynote, titled "Air bearing beyond traditional precision applications". When precision motion or positioning is required, porous media air bearings provide an outstanding solution with proven performance advantages. They are a natural choice for applications in coordinate measuring machines, precision machine tools, semiconductor wafer processing machines, and other cleanroom, high-speed, and precision positioning environments.

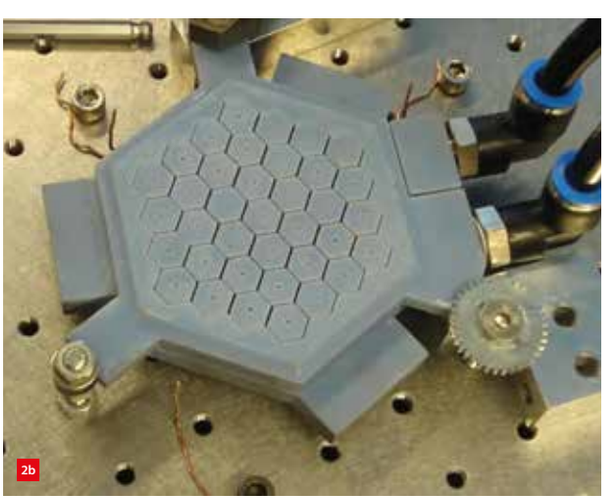
2b

Based on the expertise gained as a result of more than two decades of developing precision machines and systems with outstanding performance, new applications emerge beyond the traditional applications. This keynote presentation will present the latest developments using air bearings from enhancing image resolution in computed tomography to tight fly-height control in flat panel display processing and roll-to-roll applications. The latest developments using air bearings as seals will also be shown.

Panel discussion

Gas bearing pads from different vendors seem very similar. Many are used in quasi-standard applications like measuring machines. Is standardisation possible and advantageous? The same holds for performance specifications of gas bearings and measuring procedures. This will be discussed with representatives from manufacturers and customers in a panel discussion introduced and moderated by Wolfram Runge.

Later that day, he will also deliver the closing remarks of a, hopefully, inspiring event.

Venue and partners

The second Gas Bearing Workshop will be held on 27 March 2017, from 9.30 a.m. to 4.30 p.m., in Düsseldorf, Germany (Figure 3). The workshop is being organised by the VDE/VDI-Society Microelectronics Microsystems and Precision Engineering (GMM) from Germany and DSPE from the Netherlands. Partners in support of the workshop are the Bond van Materialenkennis (a Dutch network of experts in the area of material technology), the Consulate-General of the Netherlands in Düsseldorf, and NRW.International (the international business portal of North Rhine-Westphalia). For registration, see the website.

WWW.GAS-BEARING-WORKSHOP.COM
GMM@VDE.COM
INFO@DSPE.NL


3

3 *Venue of the workshop is the Mercure Hotel in Düsseldorf Seestern.*

ROYAL VISIT TO OLDEST AND SMALLEST VOCATIONAL SCHOOL

At the beginning of December 2016, His Majesty King Willem-Alexander of the Netherlands officially opened the new wing of the Leiden Instrument Makers School (LiS) in the presence of students, teachers and guests, including a DSPE delegation. The LiS began construction of its extra facilities in 2015, partly in response to an increased demand for graduates of the school. The LiS has now doubled its capacity to cater to 400 students.

1 *The new building.*

The LiS was able to expand thanks to additional funding from the Ministry of Education, Culture and Science, the city of Leiden, Leiden University, a grant from the Foundation Utopa, and contributions from businesses and private funds. The school has now doubled in size and will thus be able to meet the growing demand from industry for good instrument makers, while retaining the quality inherent in small-scale education with its maximum of 400 students.

115th year

In addition to its comprehensive educational programme for Research Instrument Makers, the LiS also offers the possibility of specialising in 'Life Sciences & Health', with 'Instrumentation for Space' available soon. Last year the LiS celebrated its 115th anniversary, making it one of the oldest vocational educational institutions in the Netherlands. The school was founded in 1901 by the Leiden professor and Nobel Prize-winner Heike Kamerlingh Onnes, because he needed professionals who could develop and make tools for physics research. This strong bond with Leiden University still exists today.

At the official opening, LiS director Dick Harms described the LiS' position in the Dutch educational system and the world of precision engineering. "The LiS is a school in the vocational educational sector where students receive training in precision engineering, following a proven 115-year-old tradition. Even with the expansion that we are celebrating the opening of today, we are still the smallest vocational school in the Netherlands. And we are proud of it! That pride comes predominantly from what we do: making little things that can perform great deeds."

Characteristics

"Our graduates are able to find work all over the Netherlands, and sometimes even abroad, without major difficulties. They play an important role in research and development due to their high level of knowledge, skills and creativity. We are also regularly asked the question: what is so special about the education at this school?

"There are perhaps a number of characteristics that are very important for the quality of education in our school, such as our connection to scientific culture, the very well-equipped practice environment and development-oriented culture between students and teachers, shaped especially by the enthusiastic teaching staff. More than half of our teaching time is spent in practical learning, therefore the school is also full of expensive equipment and machinery. Further, the LiS pays a great deal of attention to the typical manners of the instrument maker, who must be able to communicate with high and low, what is called 'multidisciplinary'.

To a university level

"The school also has an eye for excellent students, for whom wherever possible additional education is offered and who can present themselves in challenging graduation projects, like the particle accelerator at CERN in Geneva. Partly with this in mind, the LiS, together with Inholland University of Applied Sciences and with input from industry and the scientific community, has developed an educational programme at university level that fits seamlessly with our existing vocational level. Our ambition is to start this programme together with Inholland in the 2017-2018 school year."

Lastly, the king was given a tour of the school offering an impression of the different techniques that are taught at the LiS. ■

2 *Dick Harms, director of the LiS, receives from the hands of King Willem-Alexander (right) the 'Leiden Instrument Makers Key' (Leiden is also called the 'City of Keys') for the symbolic opening of the new wing of the school. On the left is Aad van Strien, chairman of the board of the LiS.*

3 *Teacher Frans Folst (left) shows King Willem-Alexander the art of making glass instruments.*

YPN VISIT TO ASML

On the 1st of December, last year, YPN – DSPE's Young Precision Network – paid a visit to ASML in Veldhoven, the Netherlands. After a short introduction of ASML and its position in the wafer-producing process, the YPN party was welcomed in the lounge with coffee, tea and cake.

The YPN party in the ASML Experience Center.

Split into three groups, we visited the recently opened and highly inspiring ASML Experience Center. Starting in an enclosed area, the group encircled a central floor-projection, taking one through an introductory movie about the impact ASML has on our society. Furthermore, a historic wall shows the milestones of ASML, from the PAS 2000 stepper in 1984, until the first NXE EUV lithography machine. Also, some typical consumer products of each specific time are displayed on the wall, such as the first mobile phone, the gameboy, etc.

For a mechanical engineer, it is like a child stepping into a candy store. A 3D animation of an NXE machine can be seen with 3D-glasses. Various components, old and new, are displayed behind glass, such as the different wafer-sizes used throughout the years, and even a silicon "boule" (the cylindrical ingot of high-purity monocrystalline silicon). That's not all; also present are a reticle mask as used in the latest ASML NXE machines, a wafer handling system, a wafer stage, and a model of a lens assembly. Last but not least, a view of cleanrooms on an impressive screen can be found, at what most closely resembles a space-centre control room.

After the visit to the ASML Experience Center, the group gathered at the lounge for some refreshments, and regrouped before visiting ASML TMF (Test and Measurement Facility). Here some hands-on test set-ups to validate (sub)components of the machines were demonstrated. Very impressive was the high-speed camera recording of a pellicle, the ultra-thin protective layer of the EUV-mask, to test the behaviour and limitations of this critical component.

Before drinks and snacks in the lounge to end this interesting afternoon, Bas van Dorp gave a technical presentation on the design of a laser alignment tool, ending with a simple but effective and elegant design.

YPN would like to thank ASML for the hospitality and the inspiring visit. Particularly, Cor Ottens as host of the day, Bas van Dorp for his talk, and Martijn Bazelmans for the guide through TMF.

(report by Arno and Jordan Bos)

WWW.ASML.COM

Impression of the ASML Experience Center. (Photo: Bart van Overbeeke/ ASML)

HTS HIGH-TECH SYSTEMS

CO SPONSOR

Gibas

SPONSOR

ASML

PARTNERS

Brainport Industries

DSPE YOUR PRECISION PORTAL

Dutch Precision Technology

TU/e High Tech Systems Center

FREE ENTRANCE
REGISTER NOW

Keynote

Lars Idema, Océ

Stop building machines, start model-based product development

Once you enter the arena of more mature markets you have to compete on more than a single performance spec: cost becomes total cost of ownership, speed becomes productivity. How to effectively manage these 25+ product aspects during development? Océ, part of the Canon group, is doing pioneering work in this area. Especially in the architectural phase of development the company tries to connect product level specs to technical models.

The second part of the presentation will focus on the tech churches and their competing belief systems: the Ironmen ('building is what we do') vs the Sims ('going virtual all the way'). Both are right in their own way, but how to harvest both their paradigms in product and even platform development? And how to do it faster and better every year?

These two key challenges will be illustrated with examples from the printing industry Océ is active in, an industry moving from printing of information to printing of beauty, from printing on things to printing of things.

GENERAL INFORMATION

OPENING HOURS
Thursday 16 March 2017: 09:00 - 17:30 hours

ENTRANCE FEE
Entrance for exhibitors and visitors is free of charge when registered before 14 March 2017.
When visitors do not register before 14 March 2017, an entrance fee of € 30 (excluding VAT) will be charged for visiting the event.

REGISTRATION
Preregistration is possible until 14 March 2017 via www.hightechsystems.nl/visitors. When preregistered you receive an entrance ticket which you should bring to Van der Valk Eindhoven. Upon showing this ticket you will receive your badge.

ORGANIZATION
High-Tech Systems 2017 is organized by Techwatch, publisher of Mechatronica&Machinebouw and Bits&Chips, Transistorweg 7H, 6534 AT Nijmegen, the Netherlands.

INFORMATION
Presentation programme:
Alexander Pil, alexander@techwatch.nl or
T +31 24 3504580

Other questions:
events@techwatch.nl or +T 31 24 3505544

LOCATION
Van der Valk Eindhoven
Aalsterweg 322
5644 RL Eindhoven
The Netherlands
www.hoteleindhoven.nl

CONTACT
Techwatch bv
T +31 24 3505544
events@techwatch.nl
www.hightechsystems.nl

PROGRAMME

09:30	**Introduction by Maarten Steinbuch, HTSC**			
09:45	 **Keynote** **Stop building machines, start model-based product development** **Lars Idema, Océ**			
10:30	Break			
Chairman:	**Industrial internet of things** *Georgo Angelis, TUE HTSC*	**Artificial intelligence** *Frank Sperling, TUE HTSC*	**Medical technology** *Jesse Scholtes, TUE HTSC*	**OEM challenges** *Ton Peijnenburg, TUE HTSC*
11:30	IIoT: a consortium building initiative from HTSC Georgo Angelis, HTSC	Anybody can build an autonomous machine Erik Hostens, Flanders Make	A novel design of an actuated five degree of freedom arm support Erik van Oene, Focal Meditech	Unlocking the full potential of lithography for advanced packaging Gerrit van der Beek, Liteq
12:00	Industrial internet of bearings Eric van Genuchten, SKF	Machine learning for machine vision, the big shift in 2017 Kanter van Deurzen, Delft Robotics	High tech vs applied tech in medical devices Joris Jaspers, UMC Utecht	Overcoming challenges in multi-beam dicing of a molded wafer-level chip scale package Kees-Jan Leliveld, ASM Alsi
12:30	Lunch			
14:00	Building knowledge by in-house deployment Pieter Oosterhof, Bosch Rexroth	Machine learning in social robotics Gwenn Englebienne, UT	Bio-inspired surgical instruments Paul Breedveld, TU Delft	Exceed with speed and precision Piet Kooman, Timesavers
14:30	Plant automation for future tires Erwin Zweers, VMI	AI in practice: an introduction in deep learning and its practical applications Hugo Koopmans, DIKW	Stormram 3: a MRI-compatible robotic system for breast biopsy Vincent Groenhuis, UT	Innovation challenges in a nutshell Wim Beeftink, Marel
15:00	Break			
16:00	Ugrow: the world's first medical grade parenting platform Andrew Bower en Rob Hendriks, Philips	The Robocup @Work Challenge Arnoud Visser, UvA	Development of a system for CT-guided needle placement Benno Lansdorp, Demcon	Experiences from the first 3D metal printing system for true industrial series production Mark Vaes, Additive Industries
16:30	How 3D printing is finding its position in the industry and making it more connected Siert Wijnia, Ultimaker	Deep learning in the green house Jonathan Berte, Robovision	Robot Rose gives a hand in daily household chores Cock Heemskerk, HIT	Platform development & product integration: enabling innovation and growth Bart van Dartel, Vanderlande
17:00	Drinks			

Subject to change

SUBMICRON PRECISION THROUGH HYDROSTATICS

Hembrug Machine Tools in Haarlem, the Netherlands, proudly calls itself the hard-turning company. It also might call itself the precision hydrostatics specialist. Why? Because it has succeeded in acquiring a standard run-out accuracy of 0.1 µm for the main spindles of its horizontal Mikroturn machines and 0.2 µm for the main spindles in its vertical Mikroturn machines – even with a workpiece mass of 3,000 kg and a maximum diameter of 1,500 mm in the large vertical Mikroturn 1500 V4.

FRANS ZUURVEEN

AUTHOR'S NOTE

Frans Zuurveen is a freelance text writer who lives in Vlissingen, the Netherlands.

The main reason Hembrug applies hydrostatic technology for the spindles and slides in its turning machines is accuracy (see Figure 1). Another is that the absence of mechanical contact guarantees a nearly infinite machine life. The accuracy comes from the finishing of the surfaces of natural stone components, on which spindles and slides are mounted (see Figure 2). The dimensionally very stable base material, together with oil film dimensions of some tens of micrometers, guarantees an extremely high overall machine stiffness. This stiffness is the most important condition for being able to apply the innovative metal machining technology of hard turning. Trying to cut hardened materials on a conventionally non-rigid lathe will cause violent vibrations, which prevent achieving any accuracy specification; a phenomenon called chattering, or in German, *Ratterschwingungen*.

What are the advantages of hard turning? Very often, hard turning is a cost-cutting alternative to conventional grinding, because hardened products can be machined in one single clamping operation. Thus, the need to pre-cut unhardened material before hardening and grinding is eliminated. This reduces machining times and product prices considerably. The absence of the need to use cutting fluid is an extra advantage.

Designing a precision main spindle

The main spindle in the horizontal Hembrug turning machines is supported by two radial and one axial hydrostatic bearings. Vertical machines need only one radial bearing, whereas the axial bearing in the horizontal machine has to bear the complete workpiece mass of maximum 3,000 kg. It seems rather difficult to understand that a radial hydrostatic bearing with a one-sided clearance

1 *The Hembrug Mikroturn 1000 V4, a vertical turning machine for a maximum workpiece mass of 2,000 kg.*

2 *The base frame of the Mikroturn 1000 V4, made of natural granite with extremely accurately machined and polished mounting surfaces.*

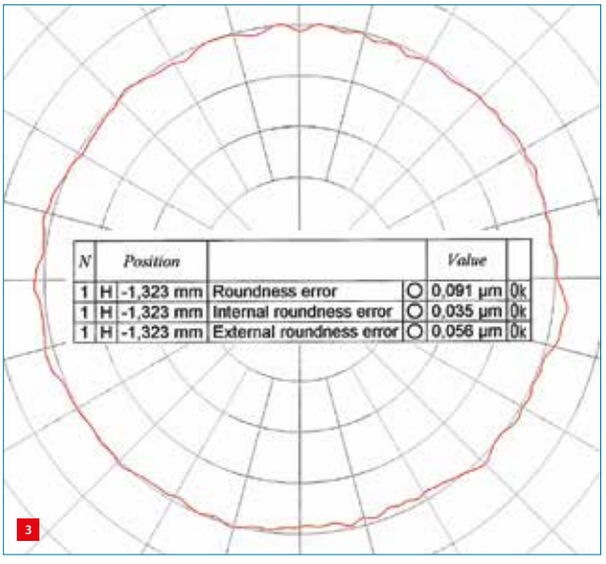

3

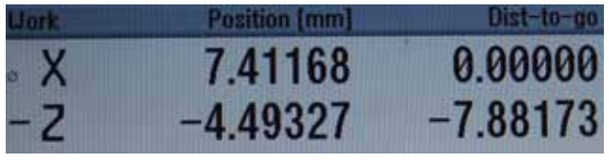

4

3 *Measurement of a radial bearing run-out deviation: 91 nm.*

4 *Slide positions displayed in millimeters with a resolution of 10 nm.*

of somewhere between 10 and 30 µm can achieve a run-out accuracy of no more than 0.1 µm (see Figure 3). While the exact clearance dimensions are a company secret, their realisation certainly recommends using Hembrug Mikroturn machines to manufacture spindle components.

Hydrostatic bearings have the favourable property of averaging and compensating for eccentric deviations: a one-sided increase of oil pressure forces the rotating shaft to move to the bearing centre. The oil pump pressure of 60 bar halves to about 30 bar inside the bearing pockets due to the pressure drop in the oil channels. After that, the laminar-flow oil pressure decreases virtually linearly from the pocket pressure to zero outside the bearing, where the oil is collected for re-use.

Heat dissipation

One condition necessary to create a precision main spindle is a highly accurate finishing of the cylindrical hydrostatic-bearing surfaces. Another important condition is the elimination, as much as possible, of thermal expansion effects. This is because only about 10% of the spindle motor power output is effectively used for the real metal cutting process. The rest enters into the bearings as heat, because of the friction due to oil viscosity. Therefore, the hydrostatic oil is thermostatically cooled to 20 ± 0.2 °C. Also, the driving motor is fluid-thermostated with the same narrow tolerance.

As mentioned previously, slides and spindles have to be extremely stiff. The same applies to the main spindle drive. While a belt drive might be a good choice when considering heat transfer, such a driving system is not stiff enough in this context. This is why the spindles are directly driven. The Mikroturn Base Line machines are provided with an in-line motor and a torsion-stiff coupling. All other Hembrug main spindles are driven by an integrated synchronous torque motor with angle encoder. By varying the motor supply frequency, the spindle rotation speed can be adjusted within a wide range, from zero to maximum 10,000 rpm, depending on the machine type.

Heavy workpiece loads make the design of the axial bearing in vertical turning machines even more challenging. While two accurately machined concentric flat surfaces with oil pockets would suffice for this kind of bearing, Hembrug has divided the lower one into a certain number of identical segments (the exact number is another company secret), which are individually finely adjustable in a vertical direction. The vertical run deviation amounts to only 0.1 µm. This accuracy could only be attained by introducing an oil pressure control loop with the measuring result of a very sensitive vertical position sensor as input.

Hydrostatic slides

The X- and Z-slides (X-direction orthogonal to the main spindle axis) for transporting the cutting tool also float on hydrostatic oil films. The X-slide is mounted on the Z-slide and their components are accurately machined from steel. This complete cross-slide assembly is securely mounted on a granite base surface. Each slide displacement is measured using optical Heidenhain scales with a resolution of 10 nm (see Figure 4), using software for interpolation between scale divisions. The ultimate slide position repeatability is 0.1 µm, with an absolute position accuracy of 1 µm for all slide ranges (up to 750 mm for the X-axis of the Mikroturn 1500 V4), thanks to software compensation for systematic scale deviations [1].

Many components of the Hembrug Mikroturn machines are manufactured by external suppliers, including the granite base frames, but slide components are precision ground in-house on a special grinding machine. All supporting base components for this high-precision planar grinder consist of natural granite, which has very good damping characteristics at a high stiffness, comparable with the Hembrug machine base properties.

Mikroturn machines are provided with CNC control systems from Siemens or Fanuc, respectively Sinumerik 840D or type 32i. These systems control servo motors by using precision angle encoder outputs. The servo motors drive precision screws that actuate pre-stressed recirculating ball nuts on the slides. As referred to above, systematic slide

position errors are compensated for by the CNC software, thanks to slide calibrations with HP laser interferometer measurements.

Hard-turning details

Hembrug is proud of its illustrious past, which goes back to 1679 when the Dutch government founded Artillerie Inrichtingen (AI) for the production of ammunition. Around 1940, AI's in-house developed lathes attracted so much attention from metal-working companies that it decided to produce them for third parties. At about the same time, the company introduced the name Hembrug, after the swing bridge nearby.
In 1969, the company rejected traditional lathe technology with prismatic guides and adopted the hydrostatic technology described above. It is through this tradition of craftsmanship, and based on the properties of stiffness, stability, damping and precision that characterise Hembrug turning machines, that Hembrug could evolve into a pioneer in the advanced new machining technology of hard turning (see Figure 5).

The machining of hardened steels resembles a kind of 'pushing and pressing away' process, which needs a negative cutting angle α_{neg} (see Figure 6), as opposed to the positive rake angle α_{pos} for the real cutting process of unhardened material. It has already been noted that hard turning on a non-rigid lathe causes violent vibrations, due to the strong tool back-pushing force, which is much greater than the main cutting force. When conventionally cutting 'soft' material, the back-pushing force is much less than the main cutting force.

While diamond is the preferred material for precision turning non-ferrous metals, it cannot be used for machining steel. Diamond reacts with the carbon in steel, which becomes 'graphitised', meaning it has a softer crystalline structure. This is why hard turning requires tool bits made

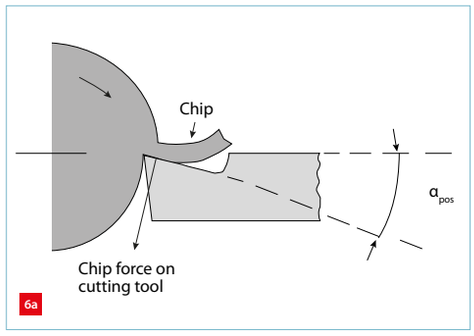

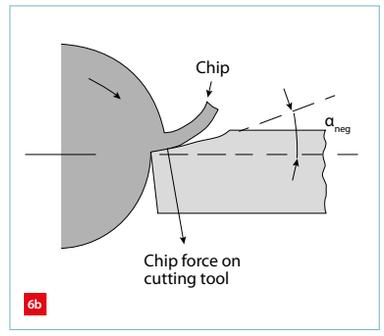

from PCBN, polycrystaline cubic boron nitride, which approximates the hardness of diamond. Figure 7 shows a selection of hard-turned workpieces.

Grinding and polishing

As stated above, hard turning offers cost savings when compared to grinding. Sometimes it is necessary, however, to perform a finishing grinding operation after hard turning to improve surface quality. This is why Mikroturn machines can be equipped with a grinding spindle, a polishing unit or a grinding belt unit (see Figure 8).

In general, hard turning provides satisfying roughness values, but sometimes a surface finish quality or surface structure is required that cannot be achieved using only hard turning. This is because a hard-turned surface shows a continuous groove from the radius of the PCBN tool bit point (see Figure 9). A finishing operation on the same

5 *Hard-turning technology.*

6 *Rake angle a. Here, the main cutting force is designated as chip force. (Modified from www.oocities.org/venkatej/mech/tomc/tomc.html)*
(a) Positive, for cutting 'soft' material.
(b) Negative, for hard cutting.

7 *A selection of workpieces, hard turned on a Hembrug Mikroturn machine.*

Mikroturn machine smooths out this groove (see Figure 10) to an R_a roughness value five times smaller: 0.2 µm.

These supplementary finishing aids illustrate the trend in the metal cutting industry of working with multifunctional machining centres, resulting in higher productivities. Hembrug claims that its combinational technology makes it possible to reach R_a roughness values down to 20 nm.

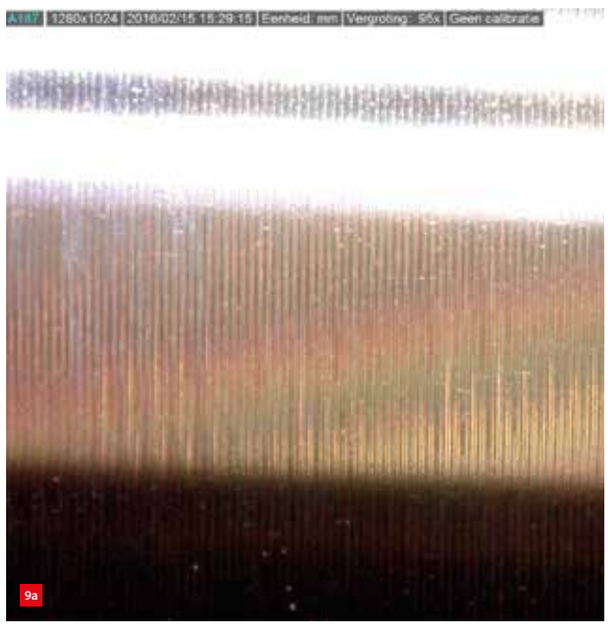

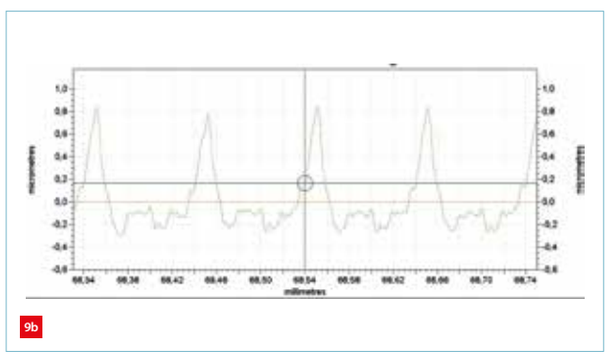

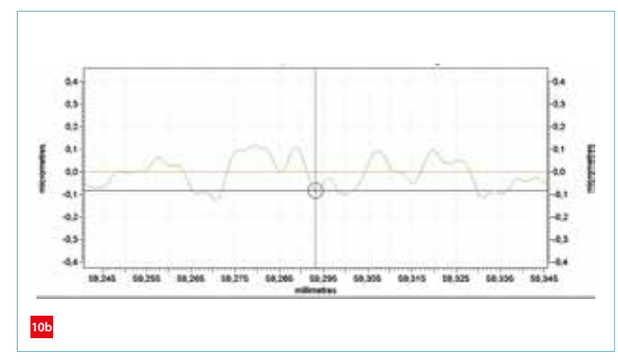

8 *Grinding capabilities on Mikroturn machines.*
(a) A supplementary grinding belt on a horizontal Mikroturn machine.
(b) A grinding disc (right) together with a PCBN cutting tool (left) on a vertical Mikroturn machine.

9 *A hard-turned surface.*
(a) Grooves due to the radius of the tool point.
(b) Roughness profile with a peak-to-valley value R_a of 1 µm.

10 *A hard-turned surface that has been belt ground.*
(a) Smoothing effect of belt grinding.
(b) Roughness profile with a peak-to-valley value R_a of only 0.2 µm.

A complete programme

As its expertise in hydrostatics has grown, Hembrug has also widened its delivery programme. As well as five versions of its horizontal Mikroturn machines, the company offers five vertical machines. In general, these innovative machines are made to customer order, because every user has individual demands. The large 1000 and 1500 V4 machines (see Figure 11) are called 4-axis machines, because they are equipped with two hydrostatic cross-slides, each having an individual X- and Z-slide. The two cross-slides enable the simultaneous machining of a workpiece with two PCBN tools. One important application of these machines is the turning of highly accurate mounting rings for sophisticated UV lenses applied in ASML wafer steppers.

The horizontal Mikroturn machines range from the Base Line, with maximum workpiece dimensions of 380 mm diameter and 350 mm length, to the 500 XL, with workpiece dimensions of 500 mm by 500 mm. The recently introduced 100 XLF can even handle a workpiece length of 1,000 mm, thanks to its two steady rests for better product support. A special type in the range of horizontal turning machines is the Twin Spindle, equipped with two main spindles (see Figure 12). This figure also illustrates the application of a robot arm for automatic product and tool handling. Having two spindles enables the preparation of a second workpiece during the cutting of the preceding one, thus reducing machining times.

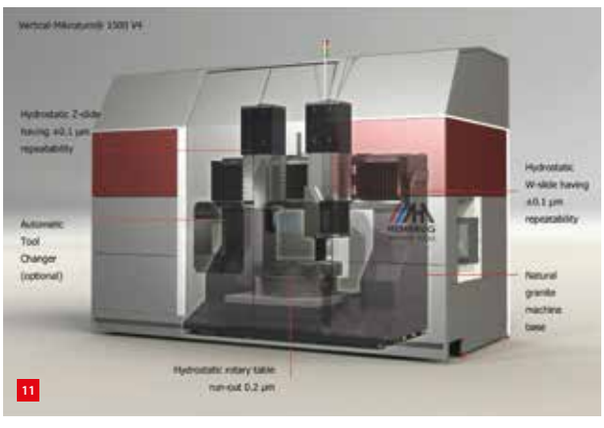

To conclude

Branching out further, Hembrug has adopted micro-grinding technologies to improve the surface quality performance of its machines. It's yet another innovative move from a renowned Dutch company with its roots in the distant past. Hembrug's evolution into a specialist in hard-turning technology is thanks to the unique qualities of these machines: precision hydrostatics, ultra-flat granite, high-resolution measuring and sophisticated numerical control. And, last but not least, the metal cutting experience of the Hembrug specialists. ■

NOTES

[1] The smallest Heidenhain scale division amounts to only 512, or 2^9, nm for optical scales on Zerodur glass ceramic from the LIP series, so it is not unrealistic to suppose that Hembrug applies these scales in its machines. Heidenhain claims an accuracy of ±3 µm per meter for these scales.

INFORMATION
WWW.HEMBRUG.COM

11 *Transparent view of the 4-axis Mikroturn 1500 V4.*

12 *The Mikroturn Twin Spindle machine with two main spindles.*

SUPPLY CHAIN COLLABORATION FOR SMART MANUFACTURING

This year from 28 to 31 March, eight technology companies in the area of Ede/Veenendaal in the Netherlands will demonstrate the latest innovations, each in their own home. During Demoweek 2017, Bemet International, Bendertechniek, Cellro, DMG MORI Netherlands, Dormer Pramet, Dymato, Heidenhain Netherlands and Mitutoyo Benelux will be informing visitors about automation, precision machining, multitasking, measurement, additive manufacturing and control technology. All these ingredients together ensure an efficient production process: smart manufacturing.

Bemet International

Full-service supplier for the manufacturing industry provides software solutions and consulting in the fields of Smart Manufacturing, Big Data, Internet of Things, ERP, CAD/CAM and Advanced Production Management. "So you want to optimise your production process using software solutions that fit together logically, resulting in savings in time, money and materials? Visit Bemet."

WWW.BEMET.NL

Bendertechniek

Supplier of equipment for the metal and plastics industry will inform visitors about the latest developments in the field of machining metalworking equipment and industrial 3D printing techniques. "We are happy to show you how you can manufacture more quickly, comprehensively and reliably with these techniques."

WWW.BENDERTECHNIEK.NL

Cellro

Manufacturer of automation systems for the manufacturing industry presents the Xcelerate robot cell for compact and flexible automation of machining. "Watch Xcelerate in action. You will see with your own eyes how the robot picks up the work around a CNC machine, as well as its simple operation and incredibly large capacity."

WWW.CELLRO.COM

DMG MORI Netherlands

Supplier of CNC lathes, multi-spindle machines, universal drilling and milling machines, 3- to 5-axle programmable machining centres, and laser and ultrasonic mills profiles itself as an innovation leader in cutting metal. "Our consultants will discuss with you which solutions will contribute to making your production process faster, more accurate and more flexible."

BE-NL.DMGMORI.COM

Dormer Pramet

Supplier of tools for turning, milling, boring and screw-thread cutting will exhibit interesting new products. In addition to the selection of tools, other factors that determine the efficiency of the manufacturing process include machine condition, cooling/lubrication conditions, stability, quality and accuracy. "Our experienced consultants know how to handle your production process."

WWW.DORMERPRAMET.NL

Dymato

Supplier of equipment will demonstrate innovations to improve the manufacturing process in the areas of turning, milling, spark eroding (electric discharge machining) and automation. Its service provision also includes the development of customised solutions. "In the field of production automation we have developed a workpiece removal mechanism."

WWW.DYMATO.NL

Heidenhain Netherlands

This developer of measurement and control technology for complex positioning tasks will introduce Connected Machining. This function pack integrates the control of the CNC machine directly into the network of all production support departments. "Other highlights include 3-D touch probes, the vast array of programming courses and a touchscreen for CNC controls."

WWW.HEIDENHAIN.NL

Mitutoyo BeNeLux

International player in precision measurement techniques will present innovations that significantly increase the efficiency of overall production. One such is the MiCAT Planner software that saves up to 90 per cent on programming time in creating measurement programmes for coordinate measuring machines. "And there are many new measurement techniques to see."

WWW.MITUTOYOBENELUX.COM

THE FUTURE OF PRECISION ENGINEERING: UK PERSPECTIVE

AUTHOR'S NOTE

Martin O'Hara was the National Strategy Manager of the EPSRC CIM-UP from 2013 to 2016, running the National Strategy Programme with Enza Giaracuni as Centre Co-Ordinator. Since the end of the programme he has returned to industry and is now Senior Technical Manager at Victory Lighting Ltd; a specialist IR and UV process lighting business.

uk.linkedin.com/in/martinoharauk

For five years, the EPSRC Centre for Innovative Manufacturing in Ultra Precision (CIM-UP) has been a focal point of ultra-precision research in the UK. EPSRC funding ceased in 2016 and a final event took place last October to summarise CIM-UP's legacy and take a look into the future of (ultra) precision engineering in the UK.

MARTIN O'HARA

In the UK, the Engineering and Physical Sciences Research Council (EPSRC) funds the majority of post-graduates and postgraduate research activity. The Centre for Innovative Manufacturing in Ultra Precision was one of the 16 centres established around 2010/2011 by EPSRC, based at various UK universities.
CIM-UP launched in October 2011 as a collaboration between the Precision Engineering Institute at Cranfield University and the Institute for Manufacturing at University of Cambridge, with research activities split between the two sites. CIM-UP started with a 5-year funding programme, which ended last year. A separate, but tightly connected, EPSRC-funded Centre for Doctoral Training (CDT) in Ultra Precision Engineering will continue to exist.

The final CIM-UP event took place in October 2016 in London at The Academy of Medical Sciences in Portland Place; a central venue for ease of attendance. The event was planned to be a summary of the activities of the centre and a look into what the future of precision engineering in the UK might look like. Speakers from both academia and industry presented results and perspectives (Figure 1).

1 *The speakers at the final CIM-UP event in London, from left to right: John Flett, Peter MacKay, David Myles, Paul Atherton (centre's steering committee Chairman), Paul Morantz, Martin O'Hara, Paul Shore, Bill O'Neill and Andrew Hurst. (Photo courtesy of Cranfield University)*

Research activities

The centre's primary research activities were focussed on developing three physical research platforms targeting three different areas of precision engineering. At the nano-scale a Laser-assisted Focused Ion Beam (FIB) machining centre (Laser FIB) was designed and developed at University of Cambridge. At Cranfield University a micro-scale micro-factory mechanical machining centre and a large-area roll-to-roll processing machine were the research platforms.

Laser Assisted Focussed Ion Beam Platform
Ion beam milling has been around for some time, and is known to be a slow process with small workpiece dimensions (e.g. areas less than a small coin). Professor Bill O'Neill presented this research platform (Figure 2) aimed to address both these manufacturing issues; to increase throughput over relatively large areas (60 mm x 60 mm). The integration of a laser-based machining centre, prior to the ion beam processing has given the research group a machine capable of rapidly ablating large areas to micrometer scales and finishing off features to nanometer scale using the ion beam.
The research developed several novel methods of laser processing, including a triple-wavelength control system capable of maintaining high beam stability and positioning control for femtosecond, picosecond and continuous-wave

2 *Artist impression of the Laser FIB Platform, designed for rapid ablation of relatively large areas. (Image courtesy of University of Cambridge)*

3 *The Micro-4 Machining Centre, now being marketed by Loxham Precision. (Photo courtesy of Cranfield University)*

4 *Drawing of the Roll-to-Roll Platform, which will be completed at Cranfield University. (Photo courtesy of Cranfield University)*

beams. The control system itself can be potentially utilised to improve the system performance of any other laser system.

One significant research output that is being considered to be made available as a stand-alone metrology system and control system, is the Optical Coherence Tomography (OCT) section that has seen a lot of interest from the high-precision controls arena and is likely to be licensed out of the project. Another research system, not quite completed in the project timeframe, but expected to show further potential for commercial exploitation is the Digital Holographic Microscopy. DHM will assist in getting further resolution and sub-lambda process imaging from the platform.

Micro-4 Machining Centre

Paul Morantz presented the Micro-4 Machining Centre (Figure 3), which has now been fully commercialised by a Cranfield University spin-out company; Loxham Precision. The research involved to produce this machine has included dynamic modelling and feedback of the machine frame, tool and workpiece to enable high-speed operation in a relatively light-weight platform. The resultant performance has produced a 5-axis machining centre that can achieve sub-micron machining capability over 100 mm x 100 mm of process area with low energy consumption (it can be run from a domestic single-phase electrical supply).

Automated loading is also possible, as well as automated tool changing, developed under a grant from Innovate UK, producing an ultra-precision machining centre capable of achieving high-volume throughput of parts. This is believed to be one of the first machining centres capable of bringing traditional ultra- and high-precision machining operations (diamond turning and milling) to a mass-production market rather than the more traditional turnkey product offering available from traditional machines of this precision.

Roll-to-Roll Processing Platform

Presented by Professor Paul Shore, the 1.4m wide roll-to-roll processing platform was the largest and most ambitious machine that the research programme developed (Figure 4). The platform was still not fully operational, but all the constituent parts were in assembly at Cranfield University at the time the CIM-UP funding ended. The machine will be completed within the Precision Engineering Institute at Cranfield University.

The platform has production-scale facilities to produce optically structured films and at a later date large-area functional films. The initial platform configuration contains

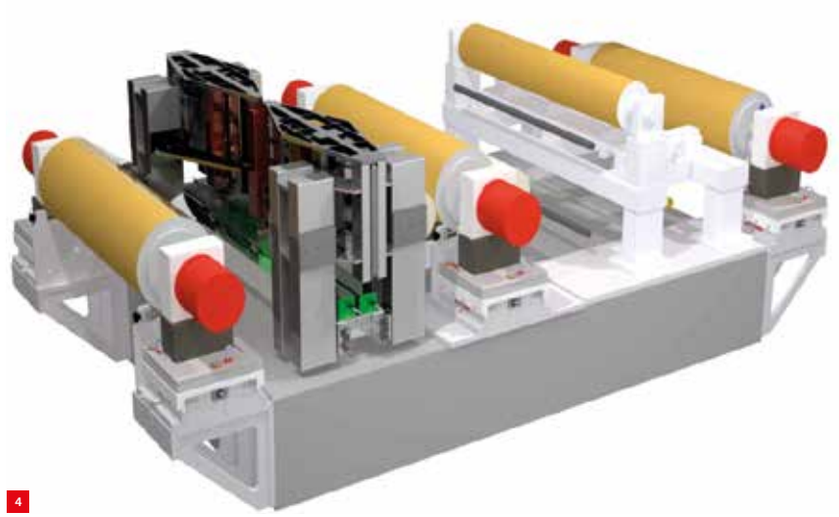

a slot-die coater for depositing thin (125 µm or less) films onto the flexible film substrate, a UV-curing system capable of delivering 18 kW of instantaneous curing energy and a 500mm diameter drum-embossing station containing perpendicular 20µm optical gratings, one running edge to edge, the other a continuous grating along the web direction of travel. There is a metrology station included and this is already ear-marked for use in an EU-wide project on the metrology of large-area parallel manufacturing (EURAMET) and the grating is the first item that may give access to researching small-feature metrology over hundreds of meters of material length.

The platform generated new research in hydrostatic bearing design for holding large masses at micron precision, and in cooling systems to handle 18kW of energy into a thin film while maintaining micron-level embossing precision in both linear directions. The control of the film transport and roll-on, roll-off stages and secondary process alignment are all on the agenda for future research programmes, both within the university and industry.

Research portfolio
Professor O'Neill presented the extensive research portfolio, some of which had been developed on the above research platforms, but also included a broad range of non-platform-specific projects conducted by both researchers and research students. These included materials research for plasmonic emitters, atmospheric plasma processing, multiple medical applications of precision manufacturing, linear collider segment and beam-line targets for many high-energy physics and materials research in both the UK and overseas.

Centre for Doctoral Training

The Centre for Doctoral Training in Ultra Precision Engineering (CDT) is not tied directly to the CIM-UP, but they are intricately linked via the research portfolio and the two centres running concurrently has brought many benefits to both. The research platforms and research portfolio are primarily delivered through the CDT students, although both universities also have additional research students, post-doctoral researchers and academics that have contributed.

The CDT is expected to continue until 2022, by which time over 70 doctoral degrees are expected to have been awarded from the programme. The programme is not exclusive to the Cambridge and Cranfield Universities; there are currently three students from the CDT being supervised at Nottingham and a possibility of one or more at Strathclyde in the near future, hence the student network is also growing geographically and going to where there is appropriate ultra-precision research activity.

National Strategy Programme

The National Strategy Programme was started in 2013 to run alongside the research activity and to help disseminate the research findings and provide a mechanism to provide bi-directional outreach into the UK's industrial base and other educational groups (including school-level projects).

The Nationals Strategy Programme was developed along four specific themes; each was presented by this author with a 'warts-and-all' reflection on the successes and areas that engagement had failed to yield the results initially expected.

Web Services
The centre's website (www.ultraprecision.org) was developed as a conduit for information on the UK's Ultra Precision activities, both in research and industry. Since October 2013 the number of visitors has risen steadily, both from the UK and overseas, producing in excess of one million hits on the page every year for the past two years, averaging over 3,000 distinct visitors per month. Included in Web Services are the centre's engagement via social media; Twitter, Facebook and LinkedIn. These show mixed results with Twitter gaining a rapidly growing following.

Ultra Precision Network
The network of businesses that have contacted, attended, been engaged in one way or another has reached a total of over 1,000 over the life of the centre, including in the UK over 90 SMEs that were new to the area and the universities. In particular the series of network seminars achieved such a success that the centre was able to deliver more than the budgeted quantity, as industrial sponsors came forward after the first year to assist with funding these on an in-kind basis.

Educational Programme
The educational outreach programme included several visits to schools to present the roles of engineering and manufacturing to school children at various stages. The major outreach activity, called Watch It Made®, was highly successful. It took school children, aged 11-13, through the experience of designing and manufacturing their own, personalised wrist watch.

The watch is manufactured by the child as they progress through the Watch It Made studio (Figure 5). The face is digitally printed with a high-impact UV-cured industrial printer, the case has some machining to complete the finish on a lathe, the rear of the case is custom engraved using a high-speed turning machine. Finally, the child has to assemble the parts they have manufactured, together with selected supplied parts (watch hands, glass cover, strap, etc.) to complete the watch. Each child leaves the studio wearing the watch they have designed and manufactured.

5 *The Watch It Made studio. (Photo courtesy of Cranfield University)*

The studio itself was developed by a group of students at Cranfield University as it was essential that the equipment could all be operated safely by a child and at the end of the process every child had a working watch.

Translation to Wealth

During the programme, methods of translating the research and other activities into a self-sustaining business were investigated. As part of the industrial outreach, for example, the centre took several small UK precision engineering businesses to exhibitions such as the euspen Conference and Precisiebeurs, as a UK cluster stand. The centre also looked at the possibility of a UK-based member organisation along the lines of DPSE. These avenues did not appear to be able to sustain the outreach activities and demand for another precision engineering member organisation in the UK appeared very weak.

The Watch It Made programme is to be continued as part of the National Physical Laboratory (NPL), one of the centre's partner organisations, as part of their educational remit. Given NPL are the UK keeper of time, this seems wholly appropriate and a great way to continue this successful programme.

The research platforms have had some success already in this final aspect of the programme. The micro-4 machining centre is now an available machine from the spin-out business Loxham Precision, hence has been completely commercialised and several orders had been received prior to the end of the programme.

The Laser-assisted FIB platform at the University of Cambridge Institute for Manufacturing has received multiple enquiries for the manufacture of prototype products and some special targets for other large science projects requiring fine features for energy beam experiments.

The roll-to-roll platform at Cranfield University has been engaged in a EU-wide new metrology project looking at standard setting for large-area manufacturing and parallel processes and is also to be made available for prototype and full production testing of structured optical films in collaboration with the roll producer UPS2 (www.ups2.co.uk) and other interested organisations.

Industry view

Four leading UK businesses in the field were invited at the event to provide their needs for future research in the areas of ultra precision and clarify where they see the market needing solutions in the near to medium-term future.

"Precision Engineering for Flexible Substrates, Purpose, Performance" was presented by John Flett of Dupont-Teijin Films. The presentation illustrated how large-area flexible substrates themselves are manufactured on rolls that are up to 9m wide and as thin as 0.5 µm, not necessarily in the same roll (Figure 6). The need to maintain clean surface finish and low surface defects, not only in the roll production process, but in their own and their customer's handling and subsequent processing as well, are areas of critical importance if these large-area films are to achieve the process demands of micron-level features, providing massive cost saving for a range of both active flexible electronics and passive optical structures.

While the mechanical and chemical properties and processes are important, it was highlighted that ultimately surface quality is the key to any and all subsequent processing and end product performance. The ultimate goals for roll-to-roll processing will be achieving tension control without contact rollers, reduction of particle adhesion force, debris reduction and in particular removal of debris down to the sub-micron level.

"High Resolution Laser Patterning Using Scanned Mask Imaging: The Outlook for Roll to Roll Processing" was presented by Dave Myles of M-Solv, looking at how some of the technologies used for semiconductor and integrated circuit assembly may be transferred to the roll-to-roll processing area (Figure 7). The reasons for such a move are not just the ability to up-scale active circuits, but also cost reduction. Some of the earliest products likely to emerge from these technologies will be simple active labels and self-monitoring packaging. This base technology is already being implemented into some touch screen and head-up display applications, but fully integrating active circuits into the film is the ultimate end-goal for many of these developing technologies.

Dr Peter MacKay of Gooch & Housego presented the requirements and market for "Optics and Assemblies", particularly in the short-wave infra-red (SWIR) region of the spectrum. Applications for seeing through mist, fog and smoke were looked at and are relatively well established, whereas the application for food processing provides new market opportunities, but in general requires higher resolution and as a consequence higher precision in both the optics themselves and the assemblies they are mounted in to produce the final complete optical system.

IR optics themselves have always been something of a precision item, partly due to the materials themselves and also some of the techniques required for finishing visible optics are not always suitable. The use of plasma figuring for surface finish and precision machining to manage 5µm spacing between optical surfaces and 20µm bore is already pushing manufacturers to achieve better cost-performance criteria, requirements that are only going to increase.

The final industrial presentation continued the optical technology theme with "Ultra Precision Machining Requirements for the Next Generation Optical and Display Systems" from Dr Andrew Hurst of Qioptic. This built on the theme of Dr MacKay, looking at the impact of multiple error and tolerance build-up, but also at new techniques such as additive manufacturing, and how that is impacting low-cost optics. The potential applications, cost and weight saving of hybrid lenses, including Fresnel structures, was covered in both commercial, military and communications applications, showing a diverse range of markets with both high value and high-precision requirements. It nicely covered a lot of the additional elements of the centre's research portfolio, despite being produced independently and observed from an industrial perspective.

Open discussions

The chair of the CIM-UP Steering Group, Dr Paul Atherton of Nanoventures, chaired the final discussion session. This was an open discussion on the research activities and what the CIM-UP participants wanted to do post this EPSRC-funded programme.

There was a consensus amongst some of the attendees that the leading legacy of the programme would be the students it had produced, both directly through the CIM, through the CDT and inspired via the Educational Outreach programme. Access for industry to the various platforms was further encouraged by the researchers involved; this would have to be direct to the universities on a per-project basis rather than co-ordinated by the centre, but was still open and available.

Why the activity had not obtained further funding was discussed. Although the proposal had reached the last stage of the funding process other funding bids were clearly stronger. It was speculated that a lack of a large ultra-precision sponsoring business in the UK could be part of the issue; the industry in the UK comprising mostly SMEs. It was noted by the author that often businesses in the ultra-precision field do not always recognise their activity as being 'Ultra Precision' related (e.g. coatings, thin-film production) and the moniker itself may be too wide-ranging to pull together sufficient commonality to generate the narrowly focussed research agenda that other bids could.

Summary

The failure to obtain further EPSRC funding for the centre is not the end of ultra-precision research in the UK or even at the two universities; both had ultra-precision research before the programme and will continue afterwards. As noted above, the research platforms themselves are complete and available for further research by both the academic institutions and industrial collaborators. The main issue will be that without a co-ordinated funding programme the link between the platforms and some of the cross-fertilisation will be reduced. Most likely the rate of development of these platforms may also slow down with the reduced research funding, but that was the situation prior to the centre's existence too.

The web services as such will continue, although the frequency of update is likely to diminish. Hopefully the network will be self-supporting and continue its relationships, both with the academic and industrial community it has created. ■

6 *PET film production, from John Flett's presentation. (Image courtesy of DuPont Teijin Films)*

7 *Roll-to-Roll Gantry System for Scanned Mask Imaging. (Photo courtesy of M-Solv)*

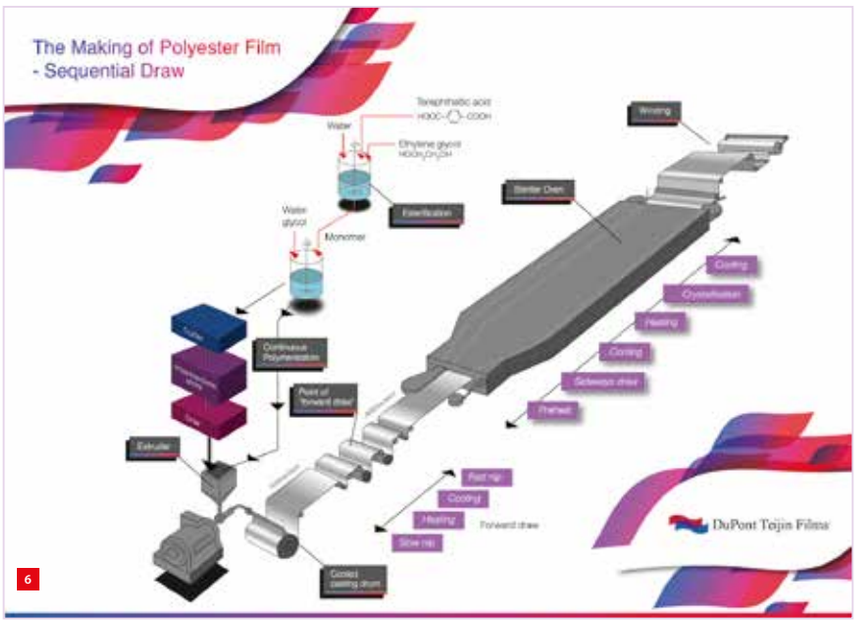

6

7

INFORMATION

WWW.ULTRAPRECISION.ORG
WWW.CRANFIELD.AC.UK/CENTRES/PRECISION-ENGINEERING-INSTITUTE
WWW.IFM.ENG.CAM.AC.UK

Holland Innovative – "We have a passion to enable our customers to outperform in quality and innovation"

Holland Innovative is specialised in project management, product & process development and reliability engineering. "Helping, training and coaching our customers in their turn-key projects is our passion." Customers include leading multinationals, small and medium-sized enterprises, and start-ups. They have a strong desire to do things differently – in a better way. Holland Innovative delivers excellence, experience, the power of implementation and, above all, flexible project managers and experts.

Holland Innovative House

The lifecycle of products is becoming ever shorter. Therefore, it is important to think deeply about the products even in the design phase. They need to be as reliable as possible, have the potential to be brought to the market quickly, and, above all, they need to meet the expectations and requirements of the customer. Based on proven statistics, Holland Innovative has built a house that rests on three fundamental principles: Project management, Design for Six Sigma, and Design for Reliability. This house ensures optimisation of the product development process – project managers, engineers and developers are trained and coached during implementation programmes.

Innovative start-ups

Holland Innovative was founded in 2006 and has grown considerably, with now more than 30 employees who are not only active in Europe, but also in America and Asia. They work on innovative projects for customers using all their knowledge and experience. Furthermore, they have the scope to work on their own innovative projects and start-ups. Holland Innovative is the initiator of HighTechXL Plaza on the High Tech Campus in Eindhoven, and the Blue Innovation Center in Venlo. Both are innovation centres for the cross-fertilisation and continuous development of start-ups and new innovations. Holland Innovative participates in various innovative start-ups, such as FloraFluids, Pulseform and LabTap.

Holland Innovative Academy

Holland Innovative helps to develop competencies of (groups of) employees, and those of their organisation. Together with renowned centres of expertise such as the IBIS University of Amsterdam, the University of Stuttgart, and Delft University of Technology, Holland Innovative organises training courses and workshops in Project Management, Product & Process Development, and Reliability Engineering. Holland Innovative offers both free enrolment and in-company training courses; tailor-made to fully meet the needs and the strategy of the participating organisation(s). As it is very important to couple these courses with practical experience, where possible, own cases/data are discussed during the training courses and/or further explored in the user groups. ■

INFORMATION

For discussing ideas, innovations, problems or opportunities for collaboration.

WWW.HOLLAND-INNOVATIVE.NL

ECP² COURSE CALENDAR

COURSE (content partner)	ECP² points	Provider	Starting date (location, if not Eindhoven, NL)
FOUNDATION			
Mechatronics System Design - part 1 (MA)	5	HTI	27 March 2017
Mechatronics System Design - part 2 (MA)	5	HTI	3 April 2017
Design Principles	3	MC	25 September 2017
System Architecting (Sioux)	5	HTI	3 April 2017
Design Principles Basic (SSvA)	5	HTI	19 June 2017
Motion Control Tuning (MA)	6	HTI	15 November 2017
ADVANCED			
Metrology and Calibration of Mechatronic Systems (MA)	3	HTI	7 November 2017
Actuation and Power Electronics (MA)	3	HTI	14 November 2017
Thermal Effects in Mechatronic Systems (MA)	3	HTI	19 June 2017
Summer school Opto-Mechatronics (DSPE/MA)	5	HTI	-
Dynamics and Modelling (MA)	3	HTI	27 november 2017
Summer School Manufacturability	5	LiS	to be planned
Green Belt Design for Six Sigma	4	HI	19 April 2017 (Enschede, NL) 20 September 2017
RF1 Life Data Analysis and Reliability Testing	3	HI	6 March 2017
SPECIFIC			
Applied Optics (T2Prof)	6.5	HTI	to be planned
Applied Optics	6.5	MC	14 September 2017
Machine Vision for Mechatronic Systems (MA)	2	HTI	11 October 2017
Electronics for Non-Electronic Engineers – Basics Electricity and Analog Electronics (T2Prof)	6	HTI	9 October 2017
Electronics for Non-Electronic Engineers – Basics Digital Electronics (T2Prof)	4	HTI	to be planned (2018)
Modern Optics for Optical Designers (T2Prof)	10	HTI	19 January 2018
Tribology	4	MC	14 March 2017 31 October 2017 (Utrecht, NL)
Basics of Design Principles for Ultra-Clean Vacuum Applications (SSvA)	4	HTI	18 April 2017
Experimental Techniques in Mechatronics (MA)	3	HTI	2 May 2017
Advanced Motion Control (MA)	5	HTI	6 November 2017
Advanced Feedforward Control (MA)	2	HTI	4 October 2017
Advanced Mechatronic System Design (MA)	6	HTI	22 September 2017
Finite Element Method	5	ENG	in-company
Design for Manufacturing – Design Decision Method	3	SCHOUT	in-company
Precision Engineering Industrial Short Course	5	CRANF. UNI.	to be planned (Cranfield, UK)

ECP² program powered by euspen

The European Certified Precision Engineering Course Program (ECP²) has been developed to meet the demands in the market for continuous professional development and training of post-academic engineers (B.Sc. or M.Sc. with 2-10 years of work experience) within the fields of precision engineering and nanotechnology. They can earn certification points by following selected courses. Once participants have earned a total of 45 points, they will be certified. The ECP² certificate is an industrial standard for professional recognition and acknowledgement of precision engineering-related knowledge and skills, and allows the use of the ECP² title.

ECP2EU.WPENGINE.COM

Course providers

- Engenia (ENG)
  WWW.ENGENIA.NL
- The High Tech Institute (HTI)
  WWW.HIGHTECHINSTITUTE.NL
- Mikrocentrum (MC)
  WWW.MIKROCENTRUM.NL
- LiS Academy (LiS)
  WWW.LISACADEMY.NL
- Schout DfM (SCHOUT)
  WWW.SCHOUT.EU
- Holland Innovative (HI)
  WWW.HOLLANDINNOVATIVE.NL
- Cranfield University
  WWW.CRANFIELD.AC.UK

Content partners

- Dutch Society for Precision Engineering (DSPE)
  WWW.DSPE.NL
- Mechatronics Academy (MA)
  WWW.MECHATRONICS-ACADEMY.NL
- Settels Savenije van Amelsvoort (SSvA)
  WWW.STTLS.NL
- Sioux
  WWW.SIOUX.EU
- Technical Training for Professionals (T2Prof)
  WWW.T2PROF.NL

UPCOMING **EVENTS**

7-9 March 2017, Veldhoven (NL)
RapidPro 2017
The annual event on prototyping, (low-volume) production and product development. An important prototyping and production technology at RapidPro is 3D printing. Also many other technologies will be comprehensively presented, "from design to manufacturing".

WWW.RAPIDPRO.NL

15-16 March 2017, Wotton-under-Edge (UK)
Lamdamap 2017
Twelfth edition of this event, focussed on laser metrology, coordinate measuring machine and machine tool performance. Venue is the Renishaw Innovation Centre.

WWW.LAMDAMAP.COM

27 March 2017, Düsseldorf (GE)
Gas Bearing Workshop 2017
Second edition of the initiative of VDE/VDI GMM, DSPE and the Dutch Consulate-General in Düsseldorf (Germany). Gas bearings are important components or integral technology of most advanced precision instruments and machines. This workshop invites all engineers, scientists, system architects and users of gas bearings to share the state-of-the-art. See also page 14 ff.

WWW.GAS-BEARING-WORKSHOP.COM

28 March 2017, Oegstgeest (NL)
ZIE 2017
The Zuid-Holland Instrumentation Event 2017 is organised by Holland Instrumentation, a network of high-tech companies, institutes and universities, aimed at promoting Zuid-Holland's instrumentation industry

WWW.HOLLANDINSTRUMENTATION.NL

28-31 March 2017, Ede/Veenendaal (NL)
Demoweek 2017
Eight companies demonstrate their automation offerings for the metalworking industry: software, robotisation, control, measurement, 3D printing and machining. The theme of this edition is "Smart manufacturing by chain collaboration". See also page 29.

WWW.DEMOWEEK.NL

6 April 2017, Veldhoven (NL)
Laser Event 2017
Event dedicated to trends and innovations in laser-based metalworking, including cutting, welding, heating, cladding, 3D printing, and automation.

WWW.MIKROCENTRUM.NL

13 April 2017, Eindhoven region (NL)
Noise & Vibration Control
Seminar on the identification and control of vibrations; a big issue in precision engineering.

WWW.MIKROCENTRUM.NL

27 April 2017, Cranfield (UK)
Ultra Precision Conference 2017
Organised by the Cambridge and Cranfield MRes cohort of the EPSRC Centre for Doctoral Training in Ultra Precision Engineering, this event is devoted to "Advances in Ultra Precision – Innovating the Future ". See also page 30 ff.

WWW.ULTRAPRECISION.ORG

18-19 May 2017, Aachen (GE)
29th Aachen Machine Tool Colloquium
Since 1948, the Aachen Machine Tool Colloquium has given trend-setting impulses for production technology in a 3-year cycle. The general topic of AWK 2017 is "Internet of Production for Agile Enterprises".

WWW.AWK-AACHEN.DE

29 May – 2 June 2017, Hannover (GE)
Euspen's 17th International Conference & Exhibition
This event will once again showcase the latest advances in traditional precision engineering fields such as metrology, ultra-precision machining, additive and replication processes, precision mechatronic systems & control and precision cutting processes. Furthermore, new topics will be addressed covering the revision of the SI and applications of precision in biomedical sciences.

WWW.EUSPEN.EU

31 May – 1 June 2017, Veldhoven (NL)
Materials 2017, engineering & technology
Trade fair, with exhibition and lecture programme, targeted at product developers, constructors and engineers. The focus is on properties - applications - solutions.

WWW.MATERIALS.NL

14-15 June 2017, Veldhoven (NL)
Vision, Robotics & Mechatronics 2017 / Photonics 2017
Combination of two events organised by Mikrocentrum (Photonics only on 14 June).

WWW.VISION-ROBOTICS.NL
WWW.PHOTONICS-EVENT.NL

10-12 October 2017, Karlsruhe (DE)
DeburringEXPO
Second edition of trade fair for deburring technology and precision surface finishing. See also page 38 ff.

WWW.DEBURRING-EXPO.COM

RELIABLY AND EFFICIENTLY TO BURR-FREE SURFACES

For today's manufacturers of precision components, there's no getting around deburring, rounding and polishing. These production steps are often seen as a necessary evil due to the high costs associated with them in some cases. However, use of the right technology permits reliable processing at reduced costs, in part due to automation.

DORIS SCHULZ

It's practically impossible to fully avoid the occurrence of burrs when using any of the traditional metal-working processes. Due to the fact that these manufacturing or processing remnants represent a risk from both a functional and an ergonomic standpoint, they have to be removed. This is still not infrequently done manually. Quite apart from the fact that the necessary process reliability and reproducibility is not assured, this manual work results in high costs and often leads to time-consuming rework.

Established and new technologies

More and more demanding requirements for process reliability and product quality, as well as cost pressure, necessitate more economic efficiency for the manufacturing steps of deburring, rounding and polishing. At the same time, uniform high quality must be assured in a reproducible manner. Various processes have established themselves to this end, for example automated brush deburring, deburring with special tooling which is integrated into the machining centres, barrel finishing and high-pressure water jets (Figure 1). Many of these processes have been further developed in recent years, and new technologies have been introduced to the market as well.

1 *In this system for high-pressure water jet deburring, CNC-positioned nozzles which generate water jets with pressures of up to 50 MPa remove chips and burrs from cross-holes, threaded holes and deep holes, as well as from inside the workpiece. (Image source: Zippel)*

Barrel finishing

Various developments such as drag finishing and so-called surf or stream finishing make reliable and economical lot processing by means of barrel finishing possible for parts which are sensitive to damage and could previously only be deburred, ground, polished or smoothed by means of a costly, non-reproducible manual procedure or at great expense with the help of a machine.

In the case of drag finishing, the parts are clamped to workpiece carriers which are then dragged through a barrel with abrasive particles or a polishing medium. Uniform flow of the abrasive particles or polishing medium around all sides of the workpieces results in effective but nevertheless gentle processing. Even in the case of workpieces with complex geometries, ideal, reproducible processing results of 'handmade quality' can be achieved within a relatively short period of time.

Surf finishing

Surf or stream finishing goes one step further. A robot immerses the workpiece at a precisely defined position into the rotating bowl which is filled with the grinding medium, and accurately guides it. This makes it possible to selectively process certain areas, or different radii can be achieved by variously positioning the robot arm. High grinding pressure is generated by rotating the bowl while the component is surfing in the grinding medium. This results in intensive, reliable processing with short cycle times yielding the

AUTHOR'S NOTE

Doris Schulz is a journalist. Her agency, based in Korntal, Germany, specialises in PR solutions for technical products and services. This article was commissioned by DeburringEXPO.

www.schulzpressetext.de

required surface finish. Depending on the application and the initial condition of the parts to be treated, R_a values of less than 0.04 µm can be achieved.

Thermal energy machining

Not every burr on a geometrically complex workpiece is easy to reach. Thermal energy machining (TEM) makes it possible to remove burrs reliably, efficiently and with consistently high quality where mechanical processing would be either uneconomical or not possible at all. It's suitable for components made of nearly all metallic materials and thermoplastics from which internal as well as external burrs need to be removed – even from places that are very difficult to access.

The parts are positioned inside a bell-shaped chamber for the deburring process, which is hermetically sealed. A precisely defined mixture of gases (e.g. oxygen and methane) is fed to the chamber by means of a gas metering system. It flows through the entire component, or the complete batch. Upon ignition of the gas mixture, burning ensues resulting in temperatures ranging from 2,500 to 3,300 °C. The burrs reach ignition temperature and react with the excess oxygen. This causes complete combustion of all burrs within approximately 20 ms, and their roots are also sealed as a result (Figure 2). Due to the fact that the process lasts just a few milliseconds, the workpieces are only heated up insignificantly. No material is removed from the surface. Overall cycle time is usually less than two minutes.

TEM makes it possible to achieve 'sharp-edged / burr-free' deburring quality. Depending on the material, slight rounding of the edges is also possible. TEM systems with rectangular deburring chambers are a new development (Figure 3). They are used, for example, to deburr die-cast zinc and aluminium parts as bulk goods. Parts handling is significantly simplified and accelerated as a result, because the loaded container can be transferred directly to a parts cleaning system after TEM deburring.

3

2 *Thermal energy machining fully removes all burrs within just a few milliseconds (left). The roots of the burrs are sealed as well (right). (Image source: ATL)*

3 *New TEM systems with rectangular deburring chambers simplify parts handling and allow for new applications. (Image source: ATL)*

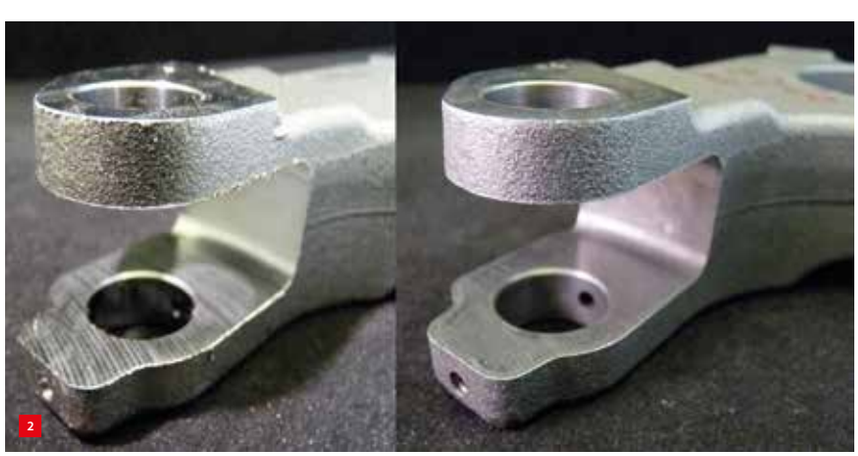

2

Electrochemical machining

Contactless electrochemical machining (ECM) is based on the principle of electrolysis. A cathodic electrode used as a tool is connected to a source of direct current. The other electrode is the anodic workpiece itself. A charge exchange between the cathode and the workpiece takes place in an aqueous electrolyte solution and processes the workpiece in a targeted fashion.
On the one hand, this makes it possible to reliably deburr difficult-to-access areas such as edges, undercuts, internal bore intersections and pockets at precisely defined locations on the workpiece. Casting, press moulding and forging flash can also be removed.
On the other hand, ECM also makes it possible to produce, for example, highly precise contours, ducts, slots and hollows in a reproducible manner without any thermal or mechanical stressing. And thus the ECM process fulfils the more and more frequently specified requirement for burr-free processing – with a high-quality surface finish as well.

Abrasive flow machining

This is also one of the characteristics of abrasive flow machining, by means of which R_a values of less than 0.01 µm can be achieved. The process is used for economically efficient deburring, edge rounding and polishing of internal and external surfaces of demanding components from the automotive and aviation industries, turbine manufacturing, medical and fluid engineering, food processing, mould and toolmaking, general machinery manufacturing and other industry sectors.

Processing is accomplished by means of abrasive particles, the type, size and concentration of which are matched to the respective task, and which are embedded in a polymer

plastic mass of defined viscosity. This grinding medium is caused to flow through or over the area of the component to be deburred in alternating directions at a defined pressure level by means of hydraulically powered pistons.

All-in-one

Deburring, cleaning, rounding and hardening of the surface in a single step is made possible by the so-called Pinflow process. The workpieces to be processed are clamped in a part-specific fixture. This fixture is laid out as a container, filled with a s process chamber. Vibrators then cause the fixture to oscillate horizontally, thus resulting in relative motion between the workpiece and the deburring medium. The resultant kinetic energy of the steel balls is transferred to the workpiece in order to process its external and internal surfaces, and the deburring effect is also apparent in difficult-to-access places. ■

DeburringEXPO

As the trade fair for deburring technologies and precision surface finishing, the DeburringEXPO provides a platform for users from all industry sectors. The second DeburringEXPO will take place at the Karlsruhe Exhibition Centre, Germany, on 10-12 October 2017. The exhibition portfolio includes equipment, systems and tools for belt grinding, brushing, abrasive flow machining, vibratory grinding, blasting with solid and liquid media, abrasive water-jet blasting, magnetic-abrasive deburring, ultrasonic deburring, chemical bath deburring, ECM, electron beam machining, TEM, mechanical deburring, buffing, polish honing, electrolytic polishing, plasma polishing, laser polishing, immersion and brush polishing, as well as measuring, test and analysis systems, and technical literature.

www.deburring-expo.de

Frencken Europe has appointed new Managing Director

Last month, Fokko Leutscher started as the new Managing Director of Frencken Europe, succeeding Henk Tappel, who recently moved to Bronkhorst High-Tech. Fokko Leutscher now heads the Frencken business units in the Netherlands and the United States (430 employees). With 20 years of experience in various management positions with ASM International, he has in recent years especially contributed to ASM's worldwide growth. "With my experience in this industry and together with the professionals who work here, I sincerely hope this wonderful company will grow, both in the Netherlands and worldwide."

Fokko Leutscher, the new Managing Director of Frencken Europe.

For almost 70 years, Frencken Europe, headquartered in Eindhoven, the Netherlands, has been a supplier for international OEMs working in the fields of medical, semiconductor and analytical systems. Besides the manufacturing, assembly and testing of complex and advanced components, modules or even complete products based on precision mechanics, electronics and software, the company also takes care of product development.

WWW.FRENCKEN.NL

Automotive drives Precision Micro's growth

The overarching objective of car manufacturers the world over is to make increasingly clean and increasingly fuel-efficient vehicles. As such, the demand for gasoline direct injection (GDi) systems is growing, as they dramatically reduce CO_2 emissions. This is great news for Precision Micro, the Birmingham-based photo-etching specialist, which supplies photo-etched flexures used in GDi systems. Precision Micro has been making major inroads into the automotive market in recent years with its photo-etched flexures. Today, it supplies flat springs to three of the five key global GDi manufacturers, producing more than 1,000,000 GDi flexures each month.

Mick Taylor, Commercial Director at Precision Micro, comments, "Etching is by far the best method for producing flexures. It is particularly suited to working with high-performance spring steels, and the burr- and stress-free nature of the process means that springs actuate longer and more reliably, which is vital in safety-critical and exacting environments such as in GDi systems.

Precision Micro supplies photo-etched flexures used in gasoline direct injection systems.

WWW.PRECISIONMICRO.CO.UK

New rotary encoders

Late last year, at the SPS IPC Drives 2016 event, Heidenhain introduced its new rotary encoder series ECI 4000/EBI 4000. The new variants are modular devices without integral bearing and with a 90mm hollow shaft. They enable replacing the conventional toothed-belt drive for coupling a motor feedback system to torque motors. With fewer components, the new rotary encoders provide increased performance and guaranteed wear-free operation, so Heidenhain claims. Moreover, they set new standards in attainable control dynamics, reliability and functionality. In this way they open up new applications for inductive rotary encoders, e.g. on highly dynamic motors, drive modules and machine components that require a corresponding hollow shaft in the encoder.

Swedish award for Dutch Somnox sleep support robot

A sleep support robot, created by the Dutch team of Somnox, was appointed winner of the Robotdalen Innovation Award 2017, at a prize ceremony held in Västerås, Sweden on February 6th. The jury's motivation: "The Somnox sleep support robot is innovative, addresses an important problem in society, is close to commercialisation, and has a plausible scientific support for solving the problem adressed (clinical studies pending). By gathering various data about the sleeping cycle, Somnox simulates human breathing rhythm and assists the user in falling asleep. The pillow-shaped product is controlled by a mobile application and can offer light and sounds, which makes its use easy and appealing for an ordinary user."

"This robotised product, which is the first non-medical solution for sleep support, is in line with our focus on new technical solutions for health care and complies with our efforts to develop what we call Technology for Independent Life", says Peter Stany, Innovation Driver at Robotdalen, the Swedish robotics initiative with the mission to enable commercial success of new ideas and research within robotics and automation; focusing on solutions for the industry, service and healthcare sector.

WWW.ROBOTDALEN.SE/EN

WWW.SOMNOX.NL

First functionally safe open absolute optical encoder

Renishaw builds on its existing functionally safe (FS) portfolio by introducing the world's first Safety Integrity Level (SIL) 2 open absolute optical encoder for both linear and rotary axis applications. The RESOLUTE™ FS encoder system is of the RESOLUTE series. Renishaw's RESOLUTE encoder is the world's most advanced single-track true-absolute optical encoder system delivering up to 1 nm resolution, superior long-term reliability, instant operation after power-up without reference return and high-speed performance to 100 m/s.

These encoders are ideal for advanced motion control applications and enable smooth velocity control with cyclical errors of < ±40 nm and excellent positional stability via jitter (noise) of < 10 nm rms. The advantages of open absolute encoders over enclosed designs include large through-hole rotary (angle) ring scales for easy design-in, low inertia and low-profile components and the absence of wear associated with contacting parts.

WWW.RENISHAW.COM

ADVERTISERS INDEX

Automation Technology

Festo BV
Schieweg 62
2627 AN DELFT
The Netherlands
T +31 (0)15-2518890
E sales@festo.nl
W www.festo.nl
Contact person:
Mr. Ing. Richard Huisman

Festo is a leading world-wide supplier of automation technology and the performance leader in industrial training and education programs.

member DSPE

Cleanrooms

Connect 2 Cleanrooms BV
Graadt van Roggenweg 328-344 (Blok D)
3531 AH Utrecht
Nederland
T +31 (0)30 298 2112
E info@connect2cleanrooms.com
W www.connect2cleanrooms.nl

Our cleanroom solutions are bespoke and scalable, encouraging efficiency through flexible design. We help organisations reduce failure rates by getting it right first time.

member DSPE

Development

TNO
T + 31 (0)88-866 50 00
W www.tno.nl

TNO is an independent innovation organisation that connects people and knowledge in order to create the innovations that sustainably boosts the competitiveness of industry and wellbeing of society.

member DSPE

Development and Engineering

ACE ingenieurs- & adviesbureau
werktuigbouwkunde en elektrotechniek BV
Dr. Holtroplaan 46
Postbus 7030, 5605 JA Eindhoven
5652 XR Eindhoven
T +31 (0)40 - 2578300
F +31 (0)40 - 2578397
E info@ace.eu
W www.ace.eu

ACE has developed into a leading engineering and consultancy firm with a strong focus on mechanics and mechatronics. Services include conceptualization, development, engineering and prototyping.

member DSPE

Development and Engineering

Segula Technologies Nederland B.V.
De Witbogt 2
5652 AG Eindhoven
T +31 (0)40 8517 500
W www.segula.nl

SEGULA Technologies Nederland BV develops advanced intelligent systems for the High Tech and Automotive industry. As a project organisation, we apply our (engineering) knowledge to non-linear systems. This knowledge is comprised of systems architecture and modelling, analysis, mechanics, mechatronics, electronics, software, system integration, calibration and validation.

member DSPE

Education

Leiden school for Instrument-makers (LiS)
Einsteinweg 61
2333 CC Leiden
The Netherlands
T +31 (0)71-5681168
F +31 (0)71-5681160
E info@lis.nl
W www.lis.nl, www.lisacademy.nl

The LiS is a modern level 4 MBO school, with a long history (founded in 1901). The school encourages establishing projects in close cooperation with industry and scientific institutes, allowing for high level "real life" work. Under the name LiS-Engineering and LiS-Academy the school accepts contract work and organizes education for others.

member DSPE

PAO Techniek en Management

De Bouwcampus
TU Delft, gebouw 26
Van der Burghweg 1
2628 CS Delft
Postbus 5048
2600 GA Delft
T +31 (0)15-2784618
E info@paotm.nl
W www.paotm.nl

Electrical Discharge Machining (EDM)

CVT BV
Heiberg 29C
5504 PA Veldhoven
The Netherlands
T +31 (0)497 54 10 40
E info@cvtbv.nl
W www.heinmade.com

Partner high tech industry for wire EDM precision parts. Flexible during day shifts for prototyping. Outside office hours low cost unmanned machining. Call and enjoy our expertise!

member DSPE

Ter Hoek Vonkerosie
Propaanstraat 1
7463 PN Rijssen
T +31 (0)548 540807
F +31 (0)548 540939
E info@terhoek.com
W www.terhoek.com

INNOVATION OF TOMORROW, INSPIRATION FOR TODAY
Staying ahead by always going the extra mile. Based on that philosophy, Ter Hoek produces precision components for the high-tech manufacturing industry.

We support customers in developing high-quality, custom solutions that can then be series-produced with unparalleled accuracy. That is what makes us one of a kind.
It is in that combination of innovative customization and repeated precision that we find our passion. Inspired by tomorrow's innovation, each and every day.

member DSPE

Lasers, Light and Nanomotion

Laser 2000 Benelux C.V.
Voorbancken 13a
3645 GV Vinkeveen
Postbus 20, 3645 ZJ Vinkeveen
T +31(0)297 266 191
F +31(0)297 266 134
E info@laser2000.nl
W www.laser2000.nl

Laser 2000 Benelux considers it her mission to offer customers the latest photonics technologies available.
Our areas of expertise are:

- Lasers, scanners and laser machines for industry and research
- Light metrology instruments for LED and luminaire industries
- Light sources for scientific applications
- Piezo- and stepper motion products for nano- and micro positioning
- Inspection and research grade high speed cameras
- Laser safety certified products

3D Measurement Services

We make it visible.

ZEISS
Graaf Engelbertlaan 75
4837 DS Breda
Postbus 4838
4803 EV Breda
T +31 (0)76 30 35 430
E m.trupia@zeiss.nl
W www.zeiss.nl

Carl Zeiss Industrial Metrology is the world's leader in CNC coordinate measuring machines and complete solutions for multidimensional metrology in the metrology lab and production environment. We also provide contract programming and contract measuring in our Measuring House near Eindhoven (NL).

member DSPE

Mechatronics Development

SOURCE OF YOUR TECHNOLOGY

CCM Centre for Concepts in Mechatronics
De Pinckart 24
5674 CC Nuenen
T +31 (0)40 2635000
F +31 (0)40 2635555
E info@ccm.nl
W www.ccm.nl

CCM translates technology into technique.
Commitment, motivation, education and skills of our employees are the solid basis for our business approach.

member DSPE

CREATING MACHINES TOGETHER

Manufacturing Technical Assemblies (MTA) b.v.
Waterbeemd 8
5705 DN Helmond
T +31 (0)492 474992
F +31 (0)492 474510
E info@m-t-a.nl
W www.m-t-a.nl

MTA is an high-tech system supplier specialized in the development and manufacturing of mechatronic machines and systems.
Our clients are OEM s in the Packaging, Food, Graphics and High-tech industries.

member DSPE

Mechatronics Development

MI-Partners
Dillenburgstraat 9N
5652 AM Eindhoven
The Netherlands
T +31 (0)40 291 49 20
F +31 (0)40 291 49 21
E info@mi-partners.nl
W www.mi-partners.nl

MI-Partners is active in R&D of high-end mechatronic products and systems. We are specialised in concept generation and validation for ultra-fast (>10g), extremely accurate (sub-nanometers) or complex positioning systems and breakthrough production equipment.

member DSPE

Metal Precision Parts

Etchform BV
Arendstraat 51
1223 RE Hilversum
T +31 (0)35 685 51 94
F info@etchform.com
W www.etchform.com

Etchform is a production and service company for etched and electroformed metal precision parts.

member DSPE

Micro Drive Systems

Maxon Motor Benelux

The Netherlands

Head Office
maxon motor benelux bv
Josink Kolkweg 38
7545 PR Enschede

South
High Tech Campus 9
5656 AE Eindhoven
T +31(053) 744 0 744
E info@maxonmotor.nl
W www.maxonmotor.nl

Belgium / Luxembourg

maxon motor benelux bv
Schaliënhoevedreef 20C
2800 Mechelen - Belgium
T +32 (15) 20 00 10
F +32 (15) 27 47 71
E info@maxonmotor.be
W www.maxonmotor.be

maxon motor is the worldwide leading supplier of high precision drives and systems. When it really matters! Try us.

member DSPE

Micro Drive Systems

FAULHABER Benelux B.V.
Drive Systems
High Tech Campus 9
5656 AE Eindhoven
The Netherlands
T +31 (0)40 85155-40
E info@faulhaber.be
E info@faulhaber.nl
W www.faulhaber.com

FAULHABER specializes in the development, production and deployment of high-precision small and miniaturized drive systems, servo components and drive electronics with output power of up to 200 watts. The product range includes brushless motors, DC micromotors, encoders and motion controllers. FAULHABER also provides customer-specific complete solutions for medical technology, automatic placement machines, precision optics, telecommunications, aerospace and robotics, among other things.

Physik Instrumente (PI)
Benelux BV
Hertog Hendrikstraat 7a
5492 BA Sint-Oedenrode
The Netherlands
T +31 (0)499-375375
F +31 (0)499 375373
E benelux@pi.ws
W www.pi.ws

PI is the world's leading provider of nanopositioning products and systems. All key technologies are developed, manufactured and qualified in-house by PI: Piezo components, actuators and motors, magnetic drives, guiding systems, nanometrology sensors, electronic amplifiers, digital controllers and software.

member DSPE

Micromachining

Reith Laser bv
Bijsterhuizen 24-29
6604 LK Wijchen
The Netherlands
T +31 (0)24 3787564
F +31 (0)24 3787586
E info@reithlaser.nl
W www.reithlaser.nl

For more than 22 years Reith Laser bv is the leading supplier of laserprocessed products in Europe. We can offer you a great diversity of lasermaterialprocessing activities:

- Laser- (micro-) cutting
- Laser drilling
- Laser welding
- Laser micromachining

Reith Laser is active in precision industry, medical industry, aerospace, semiconductor- and automotive industry.

Motion Control Systems

Aerotech United Kingdom
The Old Brick Kiln
Ramsdell, Tadley
Hampshire RG26 5PR
UK
T +44 (0)1256 855055
F +44 (0)1256 855649
W www.aerotech.co.uk

Motion Control Systems

Newport Spectra-Physics B.V.
Vechtensteinlaan 12 - 16
3555 XS Utrecht
T +31 (0)30 6592111
E netherlands@newport.com
W www.newport.com

Newport Spectra-Physics BV, a subsidiary of Newport Corp., is a worldwide leader in nano and micropositioning technologies.

member DSPE

Physik Instrumente (PI)
Benelux BV
Hertog Hendrikstraat 7a
5492 BA Sint-Oedenrode
The Netherlands
T +31 (0)499-375375
F +31 (0)499 375373
E benelux@pi.ws
W www.pi.ws

PI is the world's leading provider of nanopositioning products and systems. All key technologies are developed, manufactured and qualified in-house by PI: Piezo components, actuators and motors, magnetic drives, guiding systems, nanometrology sensors, electronic amplifiers, digital controllers and software.

member DSPE

Motion Control Systems

Reliance Precision Ltd
Florijnstraat 20
4879 AH Etten-Leur
T +31 (0)76-5040790
E sales@reliance.co.uk

- Positioning systems
- Drives
- Mechatronic Assemblies
- Intelligent Motion Control

Reliance Precision Ltd manufactures, assembles and tests precise motion control solutions for high-accuracy applications.

Optical Components

Molenaar Optics
Gerolaan 63A
3707 SH Zeist
Postbus 2
3700 AA Zeist
T +31 (0)30 6951038
F +31 (0)30 6961348
E info@molenaar-optics.nl
W www.molenaar-optics.eu

member DSPE

Piezo Systems

HEINMADE BV
Heiberg 29C
NL - 5504 PA Veldhoven
T +31 (0)40 851 2180
E info@heinmade.com
W www.heinmade.com

As partner for piezo system solutions, HEINMADE serves market leaders in the high tech industry. Modules and systems are developed, produced and qualified in-house. HEINMADE distributes Noliac piezo components.

member DSPE

Piezo Systems

Physik Instrumente (PI) Benelux BV
Hertog Hendrikstraat 7a
5492 BA Sint-Oedenrode
The Netherlands
T +31 (0)499-375375
F +31 (0)499 375373
E benelux@pi.ws
W www.pi.ws

PI is the world's leading provider of nanopositioning products and systems. All key technologies are developed, manufactured and qualified in-house by PI: Piezo components, actuators and motors, magnetic drives, guiding systems, nanometrology sensors, electronic amplifiers, digital controllers and software.

member DSPE

Ultra-Precision Metrology & Engineering

IBS Precision Engineering
Esp 201
5633 AD Eindhoven
T +31 (0)40 2901270
F +31 (0)40 2901279
E info@ibspe.com
W www.ibspe.com

IBS Precision Engineering delivers world class measurement, positioning and motion systems where ultra-high precision is required. As a strategic engineering partner to the world's best manufacturing equipment and scientific instrument suppliers, IBS has a distinguished track record of proven and robust precision solutions. Leading edge metrology is at the core of all that IBS does. From complex carbon-fibre jet engine components to semiconductor chips accurate to tens of atoms; IBS has provided and engineered key enabling technologies.

member DSPE