PROFESSIONAL JOURNAL ON PRECISION ENGINEERING

MIKRONIEK

ISSUE 3
2016
(VOL. 56)

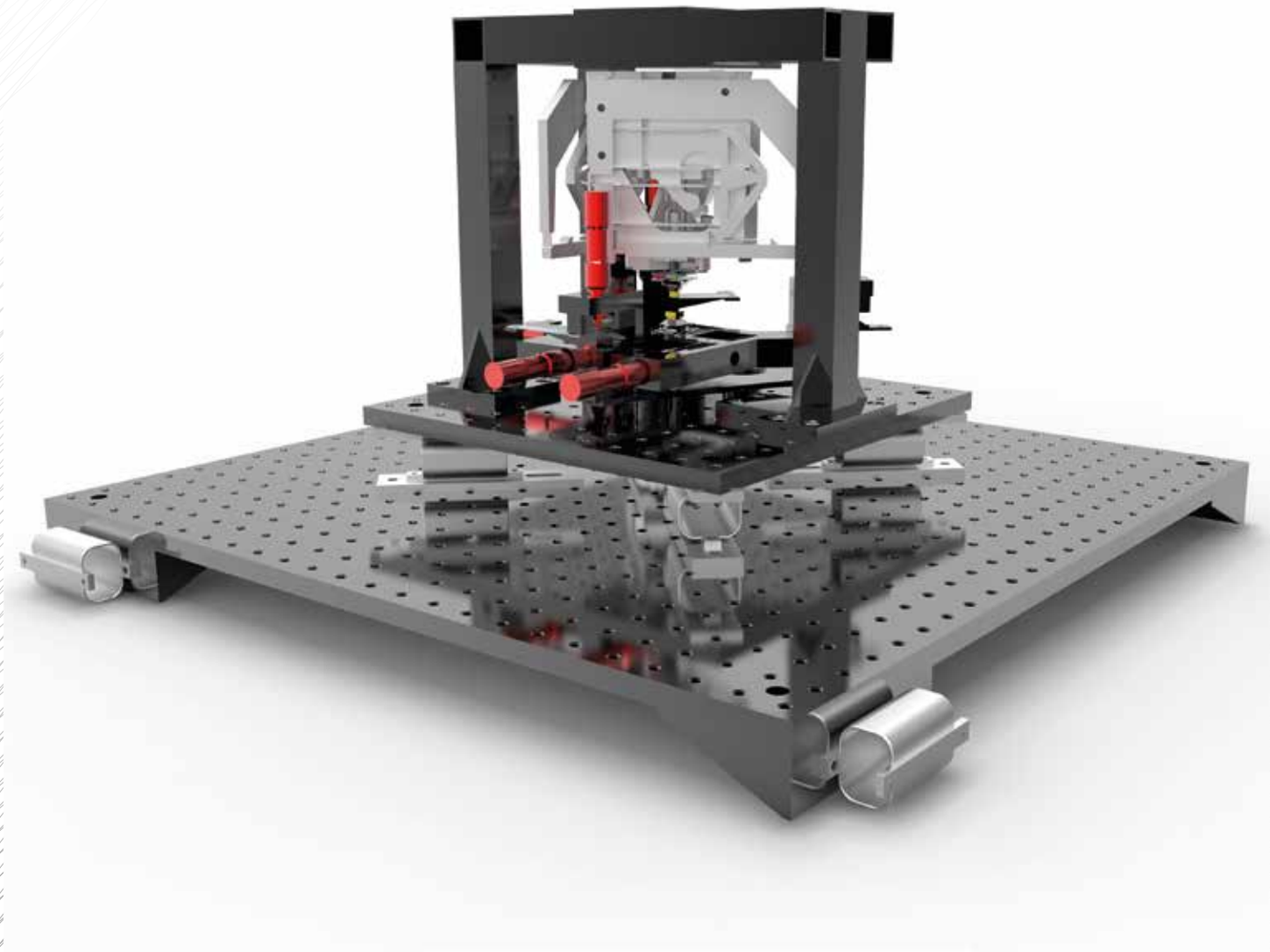

- **MECHATRONIC** SYSTEM DESIGN
- TRANSITION TO **ROBOTICS EXCELLENCE**
- **EUSPEN CONFERENCE** REPORT
- **MARTIN VAN DEN BRINK AWARD** 2016

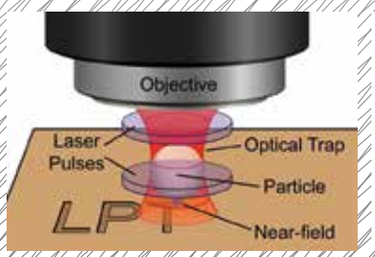

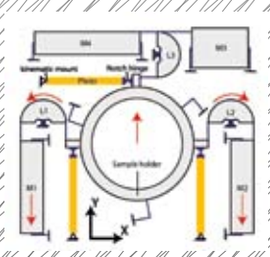

Mikroniek is a publication of the DUTCH SOCIETY FOR PRECISION ENGINEERING www.dspe.nl

DSPE

DSPE
YOUR PRECISION PORTAL

DUTCH SOCIETY FOR PRECISION ENGINEERING

DSPE Conference 2016

Conference on Precision Mechatronics

4 & 5 October 2016 Conference Hotel De Ruwenberg, Sint Michielsgestel

- 3 guest speakers and 21 presentations
- Discussions and networking
- Sharing ideas and experiences
- Posters and demonstrations
- Meeting peers in precision mechatronics

Conference contribution

DEMCON, FEI, Hogeschool van Arnhem en Nijmegen, océ, TU Delft, ASML, MI Partners, mechatronics academy, JPE Experts in Positioning, ccm, TNO, TU/e, NTS Group, MICE bv, Frencken, Nikhef, Nobleo technology, Kulicke & Soffa, MA3 Solutions, SKF, NXP, Philips, Segula Technologies, IBS Precision Engineering, NOVA, Sensitec, ceratec technical ceramics bv, CERN, Sioux, VSL Dutch Metrology Institute, ASM Pacific Technology, settels savenije van amelsvoort, VDL, TMC, University of Twente., Cerescon

Conference partner: Brainport Industries

CONFERENCE PROGRAM
> SEE PAGE 24/25

WWW.DSPE-CONFERENCE.NL

PUBLICATION INFORMATION

Objective
Professional journal on precision engineering and the official organ of DSPE, the Dutch Society for Precision Engineering. Mikroniek provides current information about scientific, technical and business developments in the fields of precision engineering, mechatronics and optics.
The journal is read by researchers and professionals in charge of the development and realisation of advanced precision machinery.

60th anniversary DSPE YOUR PRECISION PORTAL

Publisher
DSPE
High Tech Campus 1, 5656 AE Eindhoven
PO Box 80036, 5600 JW Eindhoven
info@dspe.nl, www.dspe.nl

Editor
Hans van Eerden, hans.vaneerden@dspe.nl

Advertising canvasser
Gerrit Kulsdom, Sales & Services
+31 (0)229 – 211 211, gerrit@salesandservices.nl

Design and realisation
Drukkerij Snep, Eindhoven
+31 (0)40 – 251 99 29, info@snep.nl

Subscription costs

The Netherlands	€ 70.00 (excl. VAT) per year
Europe	€ 80.00 (excl. VAT) per year
Outside Europe	€ 70.00 + postage (excl. VAT) per year

Mikroniek appears six times a year.

ISSN 0026-3699

The main cover photo (featuring the design of a die-bonding machine) is courtesy of Segula Technologies Netherlands. Read the article on page 5 ff.

IN THIS ISSUE

ISSUE 2016 3

05
High-tech in evolution
Transition from mechatronics authority to robotics excellence.

12
Bigger, broader, better...
Report of euspen's 16th International Conference and Exhibition.

18
Reducing reaction forces
A dynamically balanced flexure-based scanning mechanism.

22
ALICE powered by ALICIA
IBS Precision Engineering delivers first sensor module assembly machine to CERN for detector upgrade.

24
DSPE Conference on Precision Mechatronics
Overview of the programme.

27
Sophisticated laser machining
Submicron precision with a subwavelength laser spot achieved by applying the principle of near-field optics.

30
Interaction with humans increasingly a focus in robotics
Report of the first Robotics Annual Congress of LEO, Center for Service Robotics.

34
How do you avoid jamming?
Simple design solutions to avoid jamming during precision assembly of a shaft in a hole.

39
Award for founder of mechatronics in the Netherlands
Jan van Eijk receives the Martin van den Brink Award 2016. Report of the special gala dinner event.

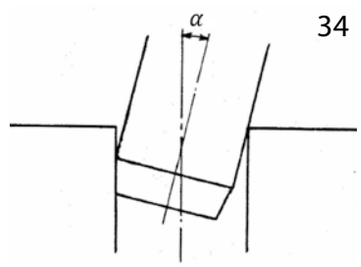

FEATURES

04 EDITORIAL
Theo Bookelmann, System Architect at Tegema, on the Dutch mechatronics approach.

33 UPCOMING EVENTS
Including: The Future of Precision Engineering.

37 DSPE
Including: Holland Innovative joins ECP² program.

38 ECP² COURSE CALENDAR
Overview of European Certified Precision Engineering courses.

42 NEWS
Including: Report of the 5th ASPE Spring Topical Meeting on Precision Mechatronic System Design and Control.

THE MECHATRONICS APPROACH

Moore's Law predicts, to a large extent, developments in semiconductor manufacturing. The requirements of smaller features, higher accuracy and high throughput place strong demands on the mechatronics way of development. Over the years, wafers have tended to become larger and thinner. Handling that kind of 'pancake' is a mechatronic matter of controlling degrees of freedom.

For me it started back in 1985, with the project "Predictive modelling", aimed at developing new CD drives and optimising the use of modelling and simulation techniques. The mechatronics approach is characterised by efficient modelling and simulation, fast estimation of feasibility and risks, pulling risks to the first stages of the project and being optionally supported by well-considered delimited experiments.

The resulting development in terms of new actuators with higher bandwidth was presented at Philips Centre for Manufacturing Technology (CFT) and was disseminated in the course "Introduction to optical disc drive systems". Very inspiring. Jan van Eijk was participating in the project and it was in the beginning of his impressive professional career in the field of mechatronics and systems engineering. He was recently honoured with the Martin van den Brink Award 2016 (also in this issue).

The American Society for Precision Engineering (ASPE) recently organised its 5th Topical Meeting in a series on the precision design and control of mechatronic systems. The opening tutorial, "The Dutch Approach to High Performance Motion Control", provided participants with the opportunity to become more acquainted with both fundamental principles and recent developments in the field of mechatronic system design (also in this issue).

In 2004, after four interesting years at ASML involved in reticle exchange time reduction, the next challenge was at Singulus Mastering in Eindhoven, the Netherlands, for the development of a complete new machine platform for Blu-ray disc mastering. Model-based system engineering was again an important ingredient in the multi-disciplinary environment. The opportunity of greenfield systems engineering gave wings to the project team and co-development parties. It resulted in the introduction of a new mastering machine – the recorder concept was the winner of the Mechatronics Award 2007.

Systems engineering based on the mechatronics approach can improve the mutual understanding between experts in different fields of engineering, i.e. mechanical, electrical, control and software. The strength of the DSPE network is to offer a vital platform for mechatronic systems engineering. The activities of the society, by means of Mikroniek, seminars, congresses and other events, improve the mutual understanding of disciplines.

Modelling techniques in whatever form and level of sophistication can serve as the common language for the professional stakeholders in a mechatronics kind of project. On the one hand, models of such a kind that they describe the quintessence of the system properties should exist and, on the other hand, there should be models that focus on architectural overview, suitable for the communication between the various stakeholders. Creative use of modelling and state-of-the-art visualisation techniques are important elements in the further evolution of the mechatronics approach.

Theo Bookelmann
System Architect at Tegema
tbookelmann@tegema.nl

HIGH-TECH IN EVOLUTION

Dutch high-tech mechatronics is, without reservation, world-leading. Outstanding systems engineering know-how formalises development of advanced mechatronics systems with predominantly linear and predictable input-output behaviours, which greatly facilitates mainly linear control designs for these systems. However, does this suffice for an equally prominent position in the field of robotics? A review of projects carried out by Segula Technologies Netherlands highlights the need for nonlinear system modeling and control expertise.

DRAGAN KOSTIĆ, PIETER VAN ZUTVEN, BART BASTINGS AND PATRICK SMULDERS

Introduction

Is the mechatronics prominence a sufficient capital for the Dutch to claim an equally prestigious position in the field of robotics? What from the existing mechatronics heritage can readily help us to compete with the international robotics leaders? What technological gaps do we still need to fill in to reach robotics excellence? These questions are addressed by presenting several projects carried out by Segula Technologies Netherlands.

The field of high-tech mechatronics is one of the pillars of the Dutch industry. Since the pioneering works of Royal Philips Electronics on optical storage systems, the national experts in this field have been establishing functional synergy of precision mechanical engineering, electronics control and systems thinking which facilitates design and development of high-tech products [1]. Theoretical and technological achievements in mechatronics have been fueling international success of many companies from the Netherlands. For instance, ASML, FEI and Océ are global market leaders in lithographic equipment, electron optics and printing systems, respectively.

The economic growth of the Netherlands strongly depends on the export industry to which the mechatronics companies contribute with many high-tech products and services. To maintain and increase prosperity, the Dutch industry needs steady productivity growth and permanent expansion of the product portfolio. Robotics offers solutions for both needs.

In particular, robots can increase the productivity and diversity of products, while also providing cost savings, by flexible automation of complex manufacturing processes, substituting human workers in health-critical tasks, outperforming human capabilities in terms of speed, precision, strength, endurance, and rapid analysis, as well as the ability to centrally manage and execute complex logistics and customise products for different markets and individual customers. Such a potential of robotics is internationally well-recognised [2] and is one of the main drivers for the Dutch Smart Industry initiative [3] [4].

Unlike the USA, Japan, South Korea, China, and Germany, the economy of the Netherlands is not yet at the forefront of deploying robots in industry. On the other hand, the Dutch high-tech mechatronics industry is among the best ones in the world. What can be done to turn the Netherlands into an international robotics authority, too? Can we boost high-tech robotics developments by employing the existing mechatronics know-how only? This article offers some answers to these questions.

Firstly, we address an important characteristic of the existing mechatronics approach – a system design optimisation for a limited number of the working points, such as motion or temperature setpoints. To achieve high system performance, the mechatronics design aims at predominantly linear input-output behaviour of the resulting system in the vicinity of these setpoints. The linear dynamics greatly facilitates understanding of the system dynamics and control design for high performance and robustness against disturbances. This we illustrate by a mechatronics design of a linear guiding mechanism for a die-bonding machine.

Secondly, we point out at an intrinsic property of robotics systems – these systems operate in wide working ranges within which the robot dynamics may change while exhibiting significant nonlinear effects. Dealing with

AUTHORS' NOTE

Dragan Kostić (mechatronics architect), Pieter van Zutven (mechatronics engineer), Bart Bastings (mechatronics engineer) and Patrick Smulders (director of system architecture) work for Segula Technologies Netherlands, based in Eindhoven.
This article is in part based on a keynote delivered at Vision, Robotics & Mechatronics 2016 in Veldhoven, the Netherlands.

dragan.kostic@segula.nl
www.segula.nl
www.tue.nl

changing and nonlinear system dynamics is not common in classical mechatronics but is inevitable for achieving advanced performance in high-tech robotics.

Fortunately, the Netherlands has a strong academic heritage in nonlinear systems [5] which can readily be combined with the existing mechatronics know-how. By theoretically sound and explicit treatment of nonlinear robot dynamics, many principles of the mechatronics system design approach can still be used for the advanced design of new and the improvement of existing robotic systems. These will be illustrated by several examples with industrial robots and professional printers.

Finally, we resume similarities and key differences between high-tech mechatronics and robotics, and we present future perspectives.

High-tech mechatronics

An example from the project portfolio of Segula Technologies Netherlands will serve to illustrate our point: the design of a guiding mechanism for a die-bonding machine (Figure 1). We recall the key steps of mechatronics system design:

1. specification of functional and performance requirements with error budgeting,
2. modeling (kinematic, dynamics, and/or servo control),
3. CAD,
4. analysis (FEM, simulation of multi-body dynamics and servo control),
5. concurrent engineering,
6. integration and testing.

The architecture of the die-bonder is described in [6]. In this machine, the guiding mechanism belongs to a module providing the vertical motion of a die to be soldered to another one while applying a contact force in a range between 0.2 N and 1 N. The detailed description of this module can be found in [7].

During their bonding, the dies are rapidly heated up until a solder material has melted. The contact force between the dies has to be kept at the setpoint despite change of the mechanical stiffness due to the melting of the solder material. The maximum allowed horizontal misalignment error between the dies is 0.5 µm after completion of the soldering process. These requirements are turned into performance specifications summarised in Table 1.

Table 1. Technical requirements on the die-bonding module with the guiding mechanism.

Vertical stroke (*Z*)	10 mm
Horizontal reproducibility (*X, Y*)	0.15 µm
Robustness against external vibrations	0.20 µm
Minimum parasitic eigenfrequency	170 Hz
Force regulation accuracy (up to 1 N)	20 mN

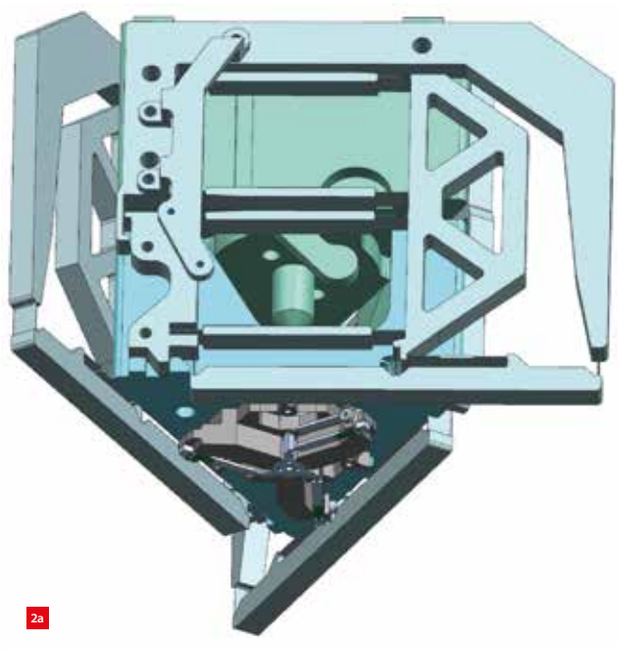

2a

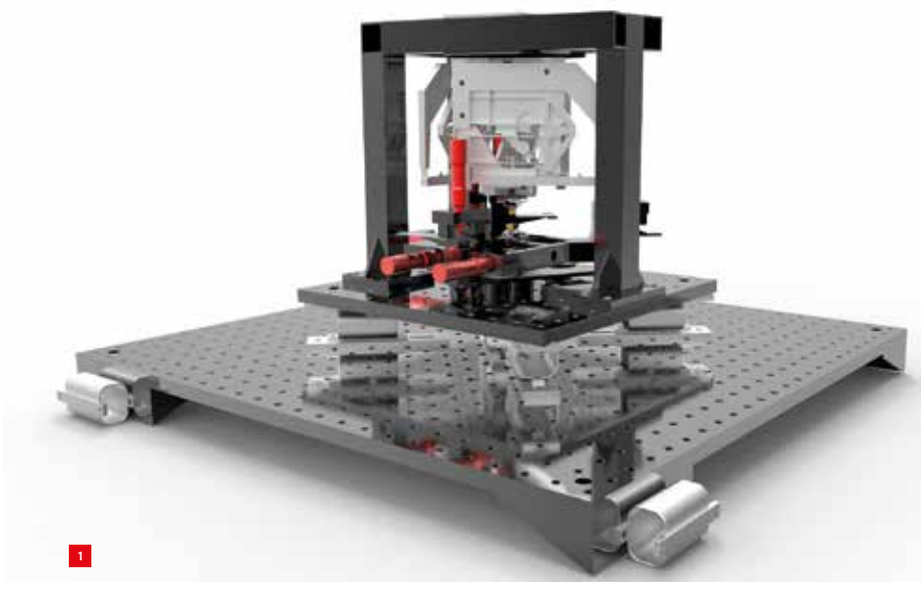

1

2b

1 *The die-bonding machine.*
2 *The guiding mechanism of the die-bonding machine.*
(a) CAD drawing.
(b) Prototype.

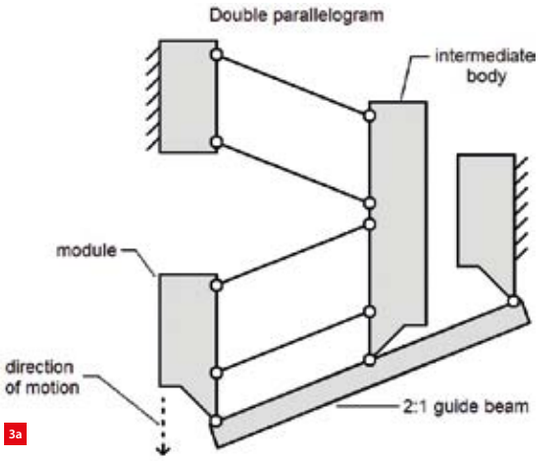

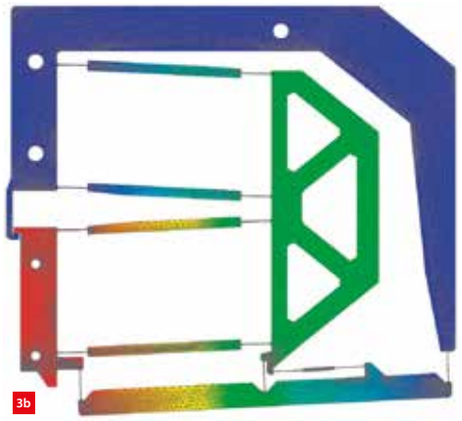

3 *The single part of the straight guide mechanism.*
(a) Concept design.
(b) FEM model.
4 *Dynamical analysis results.*
(a) Modal analysis.
(b) Bode plots.

To facilitate realisation of challenging requirements on positioning accuracy, contact force and temperature control, while strictly accommodating specifications on the environmental conditions and isolation of external vibrations, Segula utilises a systematic product development approach which incorporates different model-based design and analysis techniques, including CAD, FEM, model-based control, dynamical and servo-control simulations, etc. The CAD drawing and the corresponding physical realisation of the guiding mechanism are shown in Figure 2.

The resulting mechanism is a product of the sophisticated mechatronics methodology which begins with analytical calculations of the mechanical stiffness using standard formulae based on the mechanical concept shown in Figure 3a. After making the CAD drawings, the analytical calculations have to be verified by rigorous analysis using the corresponding finite-element model (FEM) shown in Figure 3b. Table 2 displays the verification results that confirm good correspondence between the analytical and the FEM analysis results.

Table 2. FEM verification of the analytical stiffness of the guiding mechanism.

Guide mechanism stiffness	Analytical	FEM results	Difference (%)
Vertical	335.7 N/m	314.6 N/m	6.3
Torsional, undeflected	6,891 Nm/rad	6,609 Nm/rad	4.1
Torsional, deflected	5,288 Nm/rad	5,357 Nm/rad	1.3
Stiffness reduction	0.767	0.786	2.4

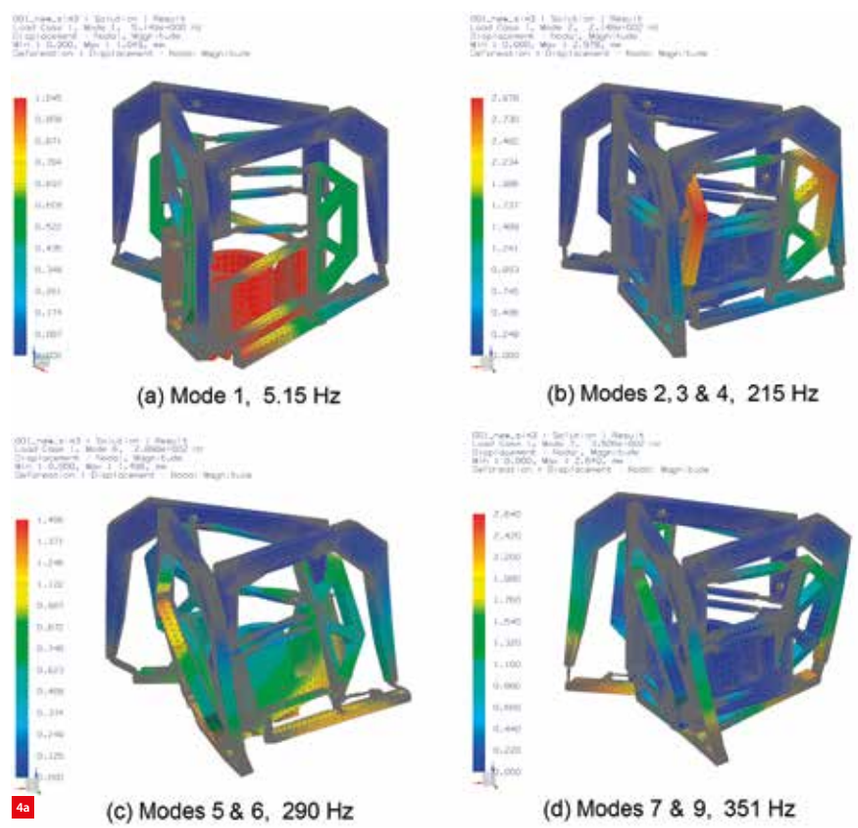

The next steps are dynamical analysis using modal calculations, Bode plots and servo-control simulations. Figure 4a shows results of the finite-element vibration mode analysis – the first four eigenmodes are shown together with their corresponding frequencies. The lowest eigenmode corresponds to the desired vertical motion of the guiding mechanism, while the other ones correspond to parasitic lateral and angular structural deformations. Since all the undesired modes are well above 170 Hz, we can conclude that the design meets the requirement on the minimum eigenfrequency given in Table 1.

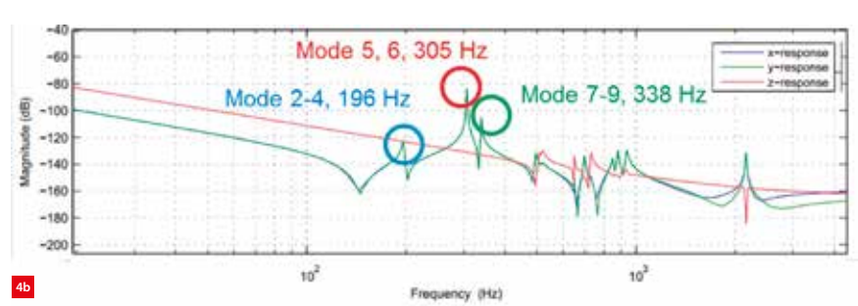

Furthermore, a Matlab/Simulink/SimMechanics (MSSM) model is developed to analyse performance of the guiding mechanism under servo-motion control. This model is built using standard mechanical elements, such as masses, springs and dampers. Since the discrete stiffness and damping parameters describe approximately linear behaviour of the guiding mechanism under small deformations only, this model captures the guide dynamics just for low contact forces (below ~3 N). Consequently, the servo-control simulations are limited to the same narrow range of the contact force setpoints. Validation of the model is performed by calculating Bode plots and comparing their eigenfrequencies with those found by the FEM modal analysis. A good match between the eigenfrequencies found in FEM and Bode plots results, as shown in Figure 4b, confirms correctness of the MSSM model.

Finally, the quality of the design is evaluated in servo-control simulations of vertical motion, horizontal misalignment and force interaction between the dies achieved by linear motion/force control of the guiding mechanism. When simulating application of the maximum considered force setpoint of 1 N, for which the discrete mechanical elements of the MSSM model still provide an adequate description of the structural deformations of the guiding mechanism, the XY-misalignment errors shown in Figure 5 are obtained under the worst-case environmental vibrations.

The achieved misalignment errors are well within the specifications on the horizontal reproducibility and robustness against external vibrations that are given in Table 1. Fulfilling the requirements is greatly aided by predominantly linear and predictable input-output behaviour of the guiding mechanism and linear control design.

However, the required performance is guaranteed only within the limited range of the contact forces. Under larger deformations, this mechanism exhibits nonlinear stiffness and dynamical effects that may decrease the system performance. Since dealing in a constructive manner with the nonlinearities falls outside the scope of the classical mechatronics system design, their appearance is typically perceived as a disturbing phenomenon which hampers high system performance. Therefore, to ensure high performance within broader working ranges of the mechatronics systems, it seems inevitable to enhance the classical approach with a systematic and theoretically sound treatment of nonlinear dynamics.

The next section presents examples of functional combination of the classical mechatronics approach and nonlinear system theory which delivers high performance of robotic and mechatronics systems over wide operational ranges, despite excitation of nonlinear system dynamics.

High-tech robotics

To demonstrate benefits of incorporating the well-established academic knowledge into the mechatronics system design approach, we consider three examples from commercial projects of Segula.

The first example concerns the explanation of root causes of undesirable vibrations at some critical points of the robotic arms used in exposure equipment for semiconductor manufacturing. While performing fast handling of substrates in the horizontal plane, the arm grippers may exhibit parasitic vibrations in the vertical direction. To clarify the origins of these vibrations, a multi-body model of the robot dynamics is derived using the theory explained in [8].

This model describes both rigid and flexible robot dynamics together with friction, setpoint generation, servo control, sampling effects (digital control and finite sensor resolution), and external disturbances. The flexibilities are captured via discrete spring and damper elements representing finite stiffness in the bearings of the robot

5 *Horizontal misalignments of the top die (top), the bottom die (middle) and the difference between the dies (bottom), respectively. The dashed lines indicate the 3σ interval.*

6 *Measured (red) and simulated (blue) parasitic vibrations (displacement vs. time) of an industrial robot. (For confidentiality reasons exact numerical values are not shown.)*

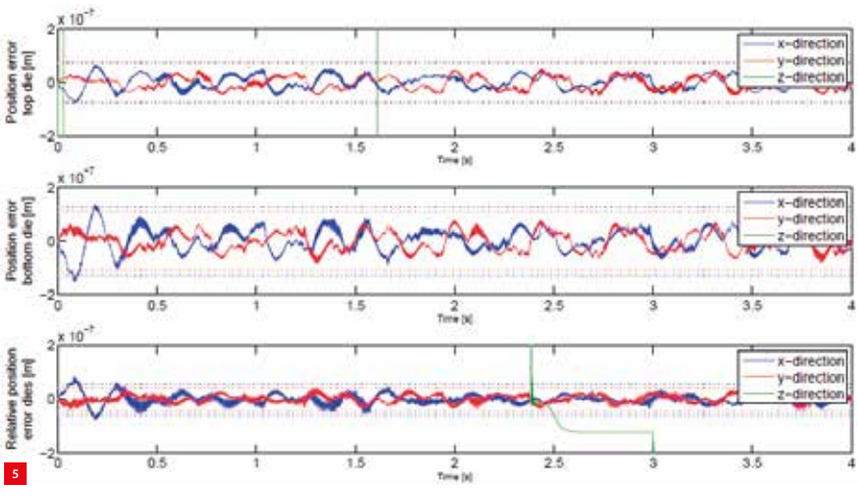

5

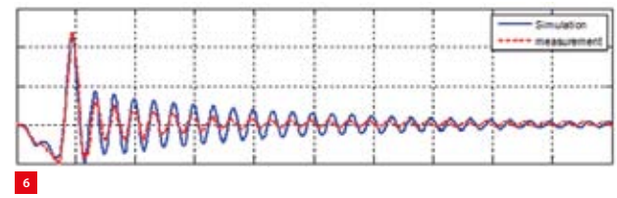

6

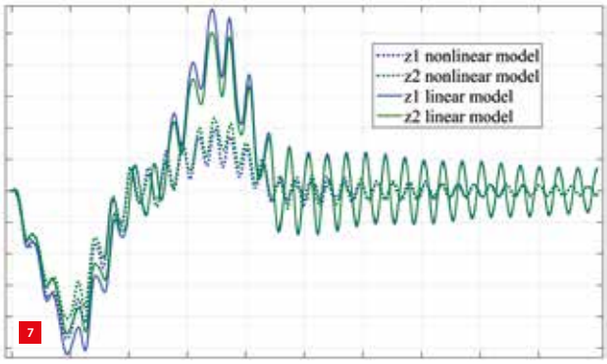

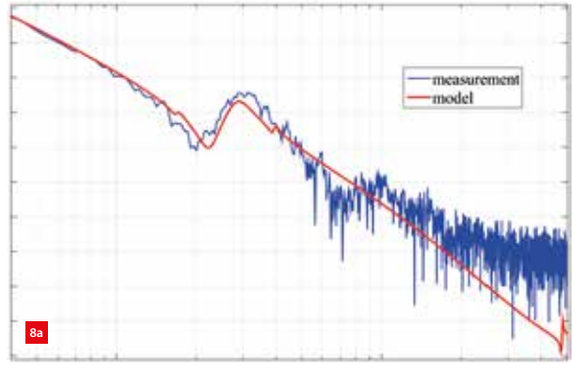

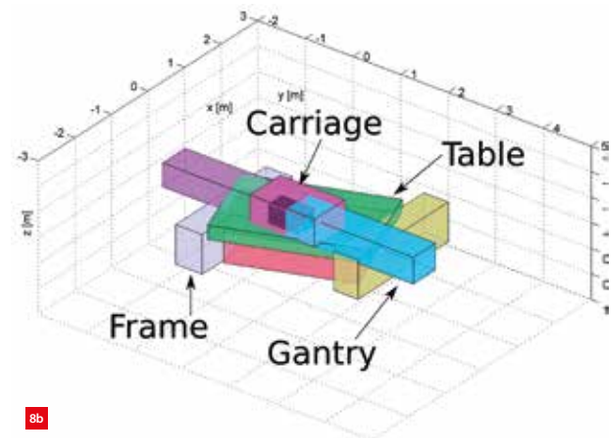

7 *Vibrations (displacement vs. time) at two critical points z1 and z2 of the robot gripper simulated using the complete nonlinear model of the robot dynamics and a linear approximation of these dynamics, respectively. (For confidentiality reasons exact numerical values are not shown.)*

8 *Simulation of a shearing mode-shape of the flatbed printer. (a) Rotational dynamics of the gantry (magnitude vs. frequency). (For confidentiality reasons exact numerical values are not shown.) (b) Visualisation of the rotational shear mode.*

joints, as well as by incorporating a FEM model of the gripper which exhibits structural elastic deformations. The model parameters are determined from the robot CAD drawings and by direct measurements including the use of nonlinear system identification. The resulting model enables rigorous analysis of the robot dynamics according to step 4 of the mechatronics system design specified above.

Figure 6 shows the submillimeter vertical vibrations of the gripper that arise after a specific movement of the robot arm. The measured vibrations are depicted in red and the simulated ones in blue. A good match between measured and model-based data verifies correctness of the model and justifies its use in the mechatronics system design. Indeed, the model confirms its convenience, since it helped us to find out the real cause of the unwanted vibrations – a parasitic pivot point in a robot joint induced by the construction. The same model gave us a hint what modifications of the construction were necessary to decrease the vibrations within their specification.

Finally, the model revealed an instructive difference between treating the nonlinear system in a classical mechatronics way, by means of linearisation, and using the nonlinear systems theory. For this, check in Figure 7 the vertical vibrations at two critical gripper points z1 and z2. The vibrations depicted with the dashed lines are obtained in simulations using our model of nonlinear robot dynamics, while the vibrations depicted by the solid lines are calculated using simple linear models of the robot dynamics in the vertical direction. Apparently, the linear model overestimates the gripper vibrations especially after their first large peak.

This illustrates how relying on linearisation could be misleading for the design of the mechatronics system with nonlinearities, since it may give a prediction of the parasitic effects that is worse than what happens in reality. That is why we recommended incorporating the nonlinear phenomena into the mechatronics design by means of modeling, system identification, simulation and testing.

In the second example, we briefly address benefits of thorough modeling of the dynamics of a large-format flatbed printer. This printer is an example of a high-tech mechatronics system of which the working range is not constrained to specific operating points. Instead, the printheads may travel distances of up to several meters in just a few seconds time or in the opposite case print on a small area repetitively.

Due to multi-body mechanics, the dynamics of the flatbed printer are intrinsically nonlinear and have to be directly accounted for during mechatronics design and performance optimisation. The dynamics of the printer are a function of location and orientation of its gantry and carriage. The printer configuration and principles of its modeling in Matlab/Simulink/SimMechanics have already been explained in [9]. The resulting model captures rigid and flexible printer dynamics, friction, servo control and discretisation effects.

This model can be used to explain root causes of dynamics that influence the printing performance, such as dynamical behaviour of flexible elements in the printer mechanics. For example, Figure 8a shows the frequency response function (FRF) depicted in blue which describes measured dynamics of the rotational degrees of freedom (DoFs) of the gantry (indicated in Figure 8b). This FRF corresponds to just one

location of the gantry and carriage and it reveals a resonance which limits the feasible servo-control bandwidth for motion control of this rotational DoF. Using the model, it becomes clear that the resonance is caused by an angular shearing mode of the printer parts below the gantry – table and frame. This shearing mode is discovered during mode-shape measurements performed on the physical printer. The same mode can be reconstructed using our model, which is visualised in Figure 8b.

To confirm the relation between the critical resonance and the shearing mode, we calculate the Bode plot of the gantry's rotational dynamics using our model. This Bode plot is depicted in red in Figure 8a, and it shows a rather good match with the measured FRF. Since the critical resonance appears in the Bode plot, too, and its frequency and magnitude depend on stiffness and damping parameters related to the shearing mode reconstructed by the model, we can with a high confidence correlate the resonance with this mode.

In the third example, we report on one of the latest activities of Segula – Matlab/Simulink/SimMechanics (MSSM) modeling and analysis of nonlinear mechanisms with structural flexibilities. For illustration, here we consider the slider-crank mechanism depicted in Figure 9a. This figure shows an exaggeratedly deformed configuration of the mechanism simulated using our MSSM model. This model incorporates FEM models of the mechanism links that are subject to structural deformations.

To verify correctness of the model, we simulate horizontal vibrations of the slider-crank mechanism in response to a horizontal force pulse applied at the outermost point of this mechanism at the right-hand side. This pulse is depicted with the yellow line in Figure 9b together with the resulting dynamic responses calculated using the MSSM model (orange line) and the corresponding FEM model (blue line).

The good match between the two responses verifies the correctness of the modeling. However, the FEM model is valid just for the given configuration of the mechanism and enables simulations in the close vicinity of that configuration only. On the other hand, the MSSM model has no restrictions concerning the working range, which makes it suitable for various mechatronics studies, such as mode-shape analysis, Bode plot calculations and servo-control simulations. With these studies, one can optimise mechanical and servo-control designs before making a physical prototype, using only the standard modeling and analysis tools of MSSM.

Conclusion

Due to growing complexity and extreme performance requirements, the modern high-tech mechatronics and robotics systems share many commonalities in terms of variance and complexity of their dynamics and critical influence of nonlinear effects on their performance. That demands further extensions of the systems engineering methodologies for conception, design and performance prediction of high-tech equipment.

To accommodate ever increasing speed, accuracy and reliability requirements, total dynamical behaviour of a high-tech system has to be taken into account from the earliest phases of the mechatronics system design process. In particular, nonlinear effects and flexible dynamics have to be already included during the modeling, analysis and design optimisation steps.

9 *Simulation of a slider-crank mechanism. (a) Exaggerated deformation. (b) Horizontal vibrations in response to a force pulse.*

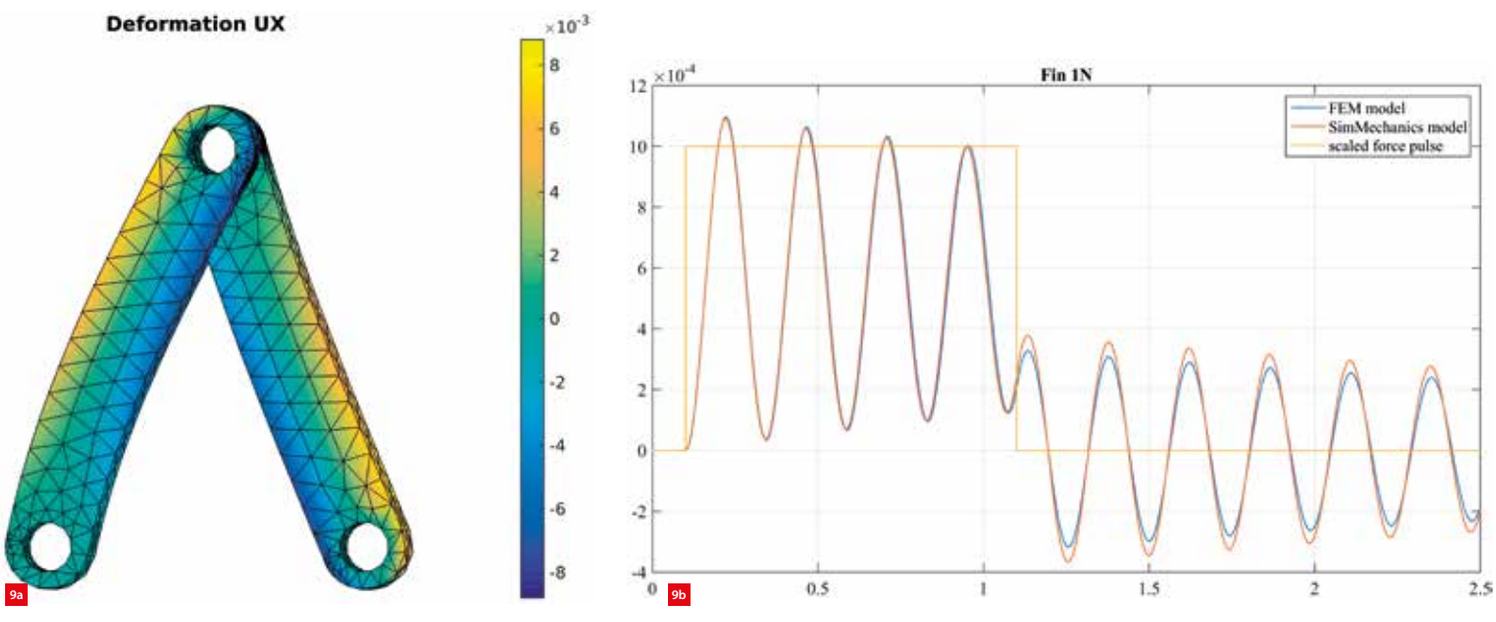

This article highlights differences between the classical mechatronics system design approach and the design of mechatronics and robotics systems with complex dynamics. Success of the classical design is greatly aided by predominantly linear and predictable input-output behaviour of the resulting system, which is only valid within a narrow range around its nominal operating point. Outside that range, the classical mechatronics system may exhibit time-varying and nonlinear effects that may decrease the system performance.

To ensure high system performance within broader working ranges, we combine the classical approach with systematic and theoretically sound treatment of the total system dynamics including flexibilities and nonlinear effects. Thanks to that, we can carry out different analyses and design optimisations of complex mechatronics and robotics systems, such as industrial robot arms and large-format flatbed printers.

We believe that empowering the existing mechatronics expertise with specific knowledge of nonlinear systems is the key for an efficient transition of the Dutch high-tech industry to an internationally recognised authority in automated production systems using advanced robotics. In other words, constructive dealing with nonlinear system behaviours is a shortcut for becoming world-class in the Smart Industry context. ■

REFERENCES

[1] R. Munnig Schmidt, G. Schitter and J. van Eijk, *The Design of High Performance Mechatronics*, Delft University Press, Amsterdam, 2011.
[2] "Advanced Industrial Robots to Power New Wave of Productivity", www.roboticsbusinessreview.com/article/forecast_advanced_industrial_robots_to_power_new_wave_of_productivity
[3] "Smart Industry: Dutch Industry Fit for the Future", www.smartindustry.nl/site/assets/files/1744/opmaak-smart-industry.pdf
[4] "Action Agenda Smart Industry The Netherlands", www.smartindustry.nl/site/assets/files/1740/smart-industry-action-agenda-summary.pdf
[5] H. Nijmeijer and A. van der Schaft, *Nonlinear Dynamical Control Systems*, Springer, New York, 1990.
[6] D. Kostić, I. Ertürk and H. Nijmeijer, "Die-bonding Thermal Modelling and Control: Model-based Design and Servo-control Simulations," *Mikroniek*, 2014 (4), pp. 10-16, 2014.
[7] J.L. Baake, "Mechatronics development of a Z-Force module for die bonding", M.Sc. report D&C 2014.023, Eindhoven University of Technology, 2014.
[8] D. Kostić and P. van Dongen, "Modeling and Control Algorithms in Robotics – Part 1: Theory," *Mikroniek*, 53 (5), pp. 5-12, 2013.
[9] D. Kostić, P. van Zutven, P. Smulders, S. Koekebakker and I. Smits, "Flatbed Printer Development," *Mikroniek* 55 (5), pp. 38-45, 2015.

BIGGER, BROADER, BETTER...

This year, the annual euspen Conference and Exhibition was held in Nottingham, UK. The event had more delegates, more paper submissions and more businesses in attendance than in the past few years, but did that make it any better? "The annual event gave me hope for the future. I had a number of conversations with younger researchers who taught me new things. I also found out a lot from my learned colleagues", one of the senior participants commented.

MARTIN O'HARA, CHRIS YOUNG, MARK MEUWESE AND SVEN PEKELDER

EDITORIAL NOTE

This report was compiled from various contributions. The effort by all authors is acknowledged, for they did an excellent job under a tight time schedule.

Martin O'Hara is National Strategy Manager for Ultra Precision at the EPSRC Centre for Innovative Manufacturing in the UK.
Chris Young, Managing Director & CEO of UK-based Micro PR & Marketing, is media partner of euspen.
Mark Meuwese and Sven Pekelder are both Chief Technology Officers at Settels Savenije, based in Eindhoven, the Netherlands.

martin@ultraprecision.org
www.ultraprecision.org
chris@microprm.com
www.microprm.com
sven.pekelder@sttls.nl
www.sttls.nl

From 30 May to 3 June at the University of Nottingham, East Midlands Conference Centre in Nottingham, UK, euspen (European Society for Precision Engineering and Nanotechnology) hosted its 16th annual International Conference and Exhibition. Networking opportunities and scale are key to euspen's flagship event, and in this respect the Nottingham event was a big success.
The organisers received 299 abstracts from which 37 oral presentations were selected, with 232 poster presentations. The 429 attendees (representing 236 individual companies or institutions from 27 countries) also accessed three keynote addresses, three workshops, and three tutorials, covering everything from multifunctional additive manufacturing to positioning in six degrees of freedom.

Tutorials

A feature that has become popular at the euspen Conference (and other similar events) is the pre-conference tutorials and workshops. This time they covered a broad range of topics from fundamentals of precision design to biomedical fabrication and functionalisation. Despite the Monday being

1

a public holiday in the UK, these tutorials and workshops were well attended and judging from the comments from delegates very well regarded.

Prof. Alex Slocum (MIT) and Piet van Rens (Settels Savenije) gave a very inspiring, high-paced overview of design principles for high accuracy. They both brought lots of hardware examples to share with the large audience of over 30 attendants. Audience and tutors discussed a lot of cases and their discussions carried on well into the conference. After several tutorials at the annual ASPE conference, are Prof. Slocum and Van Rens set to re-appear at the euspen Conference?

In the afternoon there were two tutorials, "Optical Measurement Technology" by Prof. Wolfgang Osten (University of Stuttgart) and "Introduction Design in Ultra High Vacuum" by Mark Meuwese and Sven Pekelder (Settels Savenije). In the last tutorial, about ten attendants were introduced to the world of vacuum technology and various specific topics were selected by the attendants to be discussed further. For several attendants the tutorial provided a good overview of the intricacies of the actual designing and building of a vacuum system, and the aspects to take into account, on top of "it needs to be in vacuum...".

Keynotes

The conference venue had a large steeply raked auditorium easily able to seat 520 delegates, hence although busy, it was never uncomfortably full. While European delegates as usual dominated the audience, there were significant numbers of attendees from Japan, China and North America present, illustrating how international the event has become.

The keynote presentations often set the tone for the conference and the opening keynote from Ben Hughes of NPL certainly set a standard for both metrology and precision, describing a 6-degrees-of-freedom micro-vibrational test facility developed for the European Space Agency (ESA). He showed the impressive performance of a 30+ kg testbed able to detect the impact of a feather landing on it.

The second keynote was on multifunctional additive manufacturing. Dr. Christopher Tuck, University of Nottingham, discussed the activities regarding the integration of different additive manufacturing techniques. He showed the different possibilities of additive manufacturing and the incorporation of different materials in a single manufacturing operation, e.g. touch sensors in prosthetic hands, where the structural parts, flexures and sensors are printed in a single process. In his opinion, the real value of additive manufacturing will be found when looking across multiple sectors, creating multifunctional parts using different materials and different additive manufacturing techniques.

Both in the keynotes and the following track, the picometer resolution was more or less taken for granted. It shouldn't be taken for granted, not even for something seemingly trivial as measuring the diameter of a small machined hole. After all, how do you measure, and how do you correlate the different measurement techniques, when they all provide a different outcome to the question: what is the diameter of the hole?

Metrology

Indeed, metrology was a key topic at the event, having a high number of European national measurement institutes present (NPL and PTB most noticeable) and several well-known metrology research groups (Nottingham and Huddersfield Universities again being prominent). The first and last sessions of oral presentations were on Metrology and Manufacturing Metrology, however, unlike in previous

1 *Venue for the euspen Conference was the East Midlands Conference Centre, University of Nottingham. (Photos: Martin O'Hara)*
2 *The pre-conference tutorials and workshops were well attended.*

events where a trend for say surface metrology was evident, the contributions were extremely mixed covering some of the 'usual suspects' of angular measurement and interferometry, but also robotic inspection and hybrid mixed-measurement systems.

The talks all touched on the reliability of measurement data and the necessity of integrating measurement systems into the 'production process' to put them to effective use. The problem then arises that the uncertainty of the measurement data needs to be known, without the need for offline (re)calibration, as this would mean downtime, additional tooling and another source of uncertainty. Combined with the possibilities of big-data analysis, the uncertainty of measurement data becomes even more important.

Ben Hughes (NPL), in his keynote speech, had called for a rethinking of sensor system design in order to create sensor systems that can be calibrated in-situ (when integrated into complex measurement applications with their own uncertainty). He also envisioned sensor systems that would include a self-assessment of the uncertainty of their measurement while in operation.

In the Mechatronics and Control session, there seemed to be a trend towards using various forms of adaptive control to improve machining performance, particularly for dynamic control, suggesting maybe a shift from the more traditional methods of increasing mass. This was also a feature of the first keynote paper. It was interesting to see how others independently have also been experimenting with such techniques.

Manufacturing technologies

The second day started with a keynote from Dr Sascha Migura of Zeiss on the challenges of EUV lithography for sub-8 nm resolution. This provided a very good explanation of the issues and solutions that ASML, with the help of Zeiss and other suppliers, has adopted to achieve resolutions for sub-8 nm feature sizes in silicon within their lithography systems. The detail was superb and made it relatively obvious why this node step wasn't a simple change and why the "end of Moore's Law" debate has been so hot in the past few years. However, they appear to have the solution and we should be able to get another potential node step out of the technologies developed for sub-8 nm, possibly down to 3 nm

Plasma and other energy beam manufacturing technologies was a major topic of day 2. The energy beams were all being used for specific applications: plasma on glasses for figuring and on diamond for planarisation, droplet-assisted laser for hole cutting in tungsten carbide and ion beam figuring on aluminium. Removal rates were small, except for the droplet-assisted laser; but not all the control parameters were well explained for this. These technologies are close to commercialisation, but it appears some aspects of their processes are not fully understood enough to be deployed.

By contrast to energy beam manufacturing, precision cutting might be seen as a mature and well understood process, but the session on this topic illustrated that a lot of work is still ongoing in this area. One of the best presentations, suited for direct application, was from Dr Chris Evans of University of North Carolina, Charlotte (UNCC), whose paper on single-crystal diamond tool wear could be useful for anyone and everyone operating single-point diamond turning and milling processes.

3 *A large attendance was easily handled by the venue with everyone getting a good view.*

Precision engineering in biomedical sciences is without doubt one of the hottest application areas in the precision field. There was a late-afternoon but well-attended session on this subject that showed a large range of potential applications from precision bio-cell printing, laser- and plasma-treated stent manufacture, in-vivo force measurement of medical instruments and micro-fluidics for blood-plasma separation.

Diverse mix

The Precision Machining, Replication and Additive Processes session on day 3 mostly focused on the processes themselves and little information on the achieved precision was provided, other than a couple of papers which focussed more on the analysis side. This is undoubtedly another area that will feature in future events, but it demonstrated not yet the maturity where the process precision itself starts to be a determining factor for the technology or its deployment.

The penultimate session on Advances in Precision Engineering and Nanotechnologies was possibly one of the best due to its diverse mix, although the two papers on focussed ion beam processing could both have been in the plasma/energy beam session. The presentation on the pellicle architecture for high-power EUV lithography from ASML was a great accompaniment to the third keynote. This session inadvertently showed how well the different technologies being presented fit together under the generic banner of precision, and sometimes how broad that definition really is.

Poster sessions

Undoubtedly the poster sessions were not only numerous, but the delegate attendance at them was also one of the highest for the past few years. Possibly because the layout of the venue meant the posters, main conference auditorium and exhibition hall were all very close and on the same level, it was easier for delegates to get around all areas both easily and quickly.

Overall it was a very impressive display of poster and in particular a good number from both industry and some non-academic groups that added a bit of a different flavour to this section of the event. Academia, however, did win out in the votes for best posters with Jason Ten, a doctoral student at the Institute for Manufacturing (IfM), Cambridge University, winning first prize.

A series of scholarships were awarded by Heidenhaim to students to help them cover the costs of attending such events and expand their horizons on where their future careers in precision may lead.

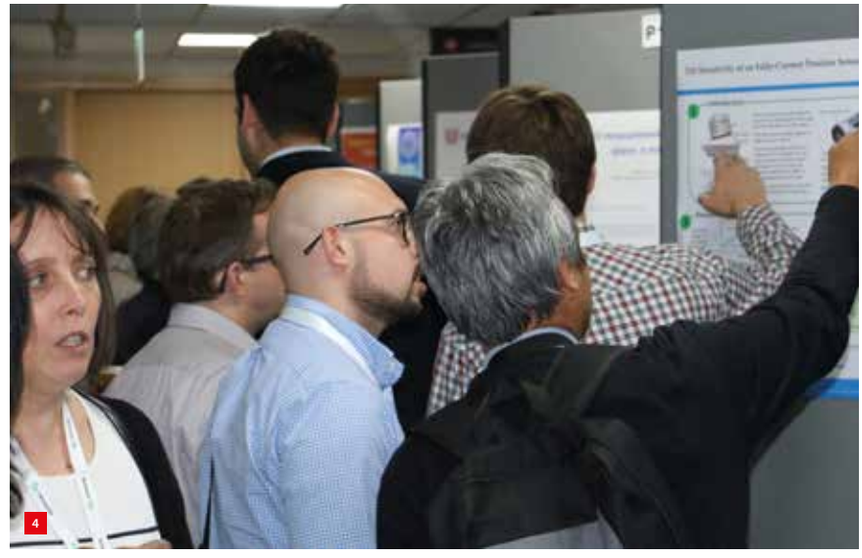

4 *Poster sessions were very busy and well attended.*

Exhibition

The exhibition running alongside the conference was an interesting assembly of UK, Dutch and international companies and institutions that focus on precision engineering. There was a significant presence from NPL in addition to a number of new exhibitors. In total, there were 39 exhibiting and 11 sponsoring companies presenting attendees with an array of cutting-edge technologies and solutions for precision engineering projects. Measurement technologies in the picometer range, 3D printing with integrated functionality, accurate machining – it was all there.

It felt very familiar to anyone who has exhibited before at a euspen event. The introduction of exhibitor drinks at the end of day 1 gave delegates and exhibitors the opportunity to interact in an informal setting.

There were also four company tours at this year's event to either the Advanced Manufacturing Research Centre in Sheffield; to leaders in precision optics measurement Taylor Hobson; to metrology specialists GE Measurement & Control; and to the University of Nottingham.

Social networking events

The social side and opportunities for networking are often overlooked, but can be one of the biggest benefits of such an intensive conference programme. On the first day of arrival, ASML hosted the welcome reception at the conference venue itself, allowing old friends to re-connect and new connections to be quickly made before the main programme started.

On the second evening, Professional Instruments hosted a drinks reception in the exhibition area, while Contact Singapore held a Student's Dinner in the main hotel. There was a lot more focus, it felt, for students at this euspen event, both in the poster sessions expansion to give more opportunities to display research, and in the dinner, plus the great support of

5 *ASML sponsored and hosted the welcome reception. Here, Jelm Franse, Senior Director Mechanical Development at ASML, brings out a toast.*

businesses like Heidenhain in awarding scholarships. These contributions are undoubtedly to be applauded and great examples of how to encourage more young talent to train and remain in the precision field of engineering.

The conference dinner on day 2 was very well attended and held at the former home of English poet Lord Byron, Colwick Hall.

Comments

David Billington, Executive Director at euspen, summed up the 2016 event: "It was extremely gratifying to see how well the event in Nottingham worked this year. We are acutely aware as organisers that people have to be very careful how much time they commit away from their offices these days, and as such we need to produce an event that has enough activity and potential in terms of networking to merit the trip. Feedback this year has been extremely positive from exhibitors and delegates alike and the event is becoming a fixture on people's calendars year-to-year, so we are confident that it will grow still more as we move forward."

Prof. Richard Leach from the Advanced Technology Research Group in Nottingham University worked closely with euspen to host this year's event. Leach said of the event: "The exhibition was packed, and all the exhibitors expressed their appreciation of the way the conference was planned and executed. The Manufacturing Metrology Team (of which I am a member) were well represented with four papers, including a session keynote from Dr Christopher Tuck looking at multifunctional additive manufacturing."

Prof. Stuart Smith from UNCC stated: "The annual event gave me hope for the future. I had a number of conversations with younger researchers who taught me new things. I also found out a lot from my learned colleagues, made plans for interesting research, and picked up loads of condensed wisdom. It was an awesome experience, I will go back home with renewed vigour".

Dirk Smits from regular sponsoring exhibitor IBS Precision Engineering was eager to congratulate the organisers of the event, and also noted that once again euspen has raised the bar in terms of the quality of the conference presentations. Smits said: "The number of concrete quotations we had to make at the exhibition was the largest of all euspen events to date. What cannot be underestimated is the enormous network of academia and industry we meet with every year. It is interesting business-wise, but also a lot of fun to talk to similarly-minded peers and find out what they are working on."

Derrick Jepson from exhibitor Aerotech also praised the quality of the event. He said: "As I have come to expect from euspen, this was a very professionally organised event. The choice of venue also ensured that delegates had equal and easy access to the exhibitors for those all-important networking discussions in the scheduled breaks between conference sessions. I was attending with my sales engineer for this sector, and he reported that he was able to progress current opportunities with the attendees, which was an added benefit."

Joost van Rens from The High Tech Institute, Eindhoven, the Netherlands, mentioned that he found that "everybody who is anybody in precision engineering" was at the event in Nottingham. The organisers are aware of the fact that it is important to continue to bring together such a comprehensive and high-quality community of academics and industrialists. However, the key is not to simply provide a forum for the same people year on year, but to continually ensure that new professionals are invited and can come to experience the unique quality and depth of information concerning micro- and nanotechnology.

Dishi Phillips, Business Development Manager at euspen, reinforced this point: "As organisers, we were delighted to extend the reach of the Nottingham event, and the fact that we saw global representation from over 230 different companies is testament to the fact that we are providing an international networking event for what is a truly international set of disciplines."

And this is ultimately what sets the euspen annual event apart, not just gathering academics and industrialists involved in the area of precision engineering together, but stimulating the exchange of views and ideas, and thereby stimulating innovation. The last word should perhaps be left to Alison Raby from nanopositioning experts Queensgate Instruments. "I have attended euspen's annual event for the last three years and every year it has been a better event for Queensgate. The networking component sets euspen ahead of other events. We will certainly attend next year."

Conclusion

While the venue was not as stunning as in previous years (re. Dubrovnik), euspen 2016 managed to organise a much larger conference, engaging a significantly increased number of delegates from around the world, not just Europe. The increased number of students is to be welcomed as were the excellent expanded poster sessions.

The next euspen International Conference & Exhibition will be held 29 May-2 June 2017 in Hannover, Germany. ■

INFORMATION
WWW.EUSPEN.EU

REDUCING REACTION FORCES

Flexure-based scanning mechanisms produce reaction forces, which can result in position or alignment errors. Traditionally, these reaction forces are compensated by large masses or complicated, separate compensation mechanisms. A flexure-based scanning mechanism has been designed that uses passively actuated counter masses to compensate reaction forces. As a result, the total reaction forces produced by the mechanism are reduced by a factor 50 in the main actuation direction, while not requiring extra actuators and maintaining a compact design.

PJOTR SEBEK AND JESSE VAN KOPPEN

Introduction

Flexure mechanisms are widely used in microscopy applications, such as Scanning Electron Microscopy (SEM) and Scanning Tunneling Microscopy (STM), on account of their high repeatability, high bandwidth and because they exhibit no friction or hysteresis. In order to create an image, flexure mechanisms often produce a scanning motion.

However, any actuation of a mechanism produces reaction forces, which can impact position accuracy and influence the measurement results. In order to maximise position accuracy, the position error caused by the reaction forces of the scanning mechanism should be minimised. One frequently used method of reducing the position error is by compensating the reaction forces.

Several ways exist to compensate for the reaction forces of high-accuracy mechanisms. The most common method is to mount the mechanism on a very rigid and heavy frame, such as a granite block, where the inertia of the block will reduce the effect of reaction forces.
Alternatively, additional mechanisms can be added that compensate the reaction forces of the mechanism by producing opposite reaction forces, usually by moving a balancing (counter) mass. These mechanisms can consist of actively actuated counter masses, e.g. voice coils [1], slabs of metal on a magneticcally levitating suspension as used in ASML wafer scanners, or a completely separate mechanism [2].

In linkage mechanisms, reaction forces are often passively compensated. This can be done by placing a counter mass at a strategic location [3] or by a smart mechanism design [4], such that the total summed momentum of the mechanism is constant at all times. When the momentum of the mechanism is constant, in total, no reaction forces are produced.
In a micro-scale flexure-based mechanism, a passive compensation strategy has been used to increase shock resistance [5]. However, no literature has been found where this concept of passive reaction force compensation has been applied to macro-scale flexure-based mechanisms.

Reaction force compensation through passively actuated counter masses can have significant benefits for macro-scale flexure mechanisms. With passive reaction force compensation, no additional actuators are needed, thereby resulting in a cheaper and more compact design. Moreover, no sensors are needed to control the error, further reducing costs.

In this article, a first step is taken to implement passively actuated counter masses in flexure mechanisms. In a collaborative project with system supplier Hittech Multin and Delmic, a company that produces correlative light and electron microscopy solutions, a flexure-based scanning mechanism was designed and tested.

Design

The mechanism consists of a ring in the centre, on which the sample will be mounted (Figure 1). The ring is suspended by three folded leafsprings. The mechanism makes a scanning motion with high bandwidth (1,000 Hz) in the Y-direction and a low-bandwidth stepping motion in the X-direction.

AUTHORS' NOTE

Pjotr Sebek graduated with an M.Sc. in Mechanical Engineering at Delft University of Technology, the Netherlands. Jesse van Koppen works as a mechatronics engineer at Hittech Multin, based in The Hague, the Netherlands.

jvkoppen@hittech.com

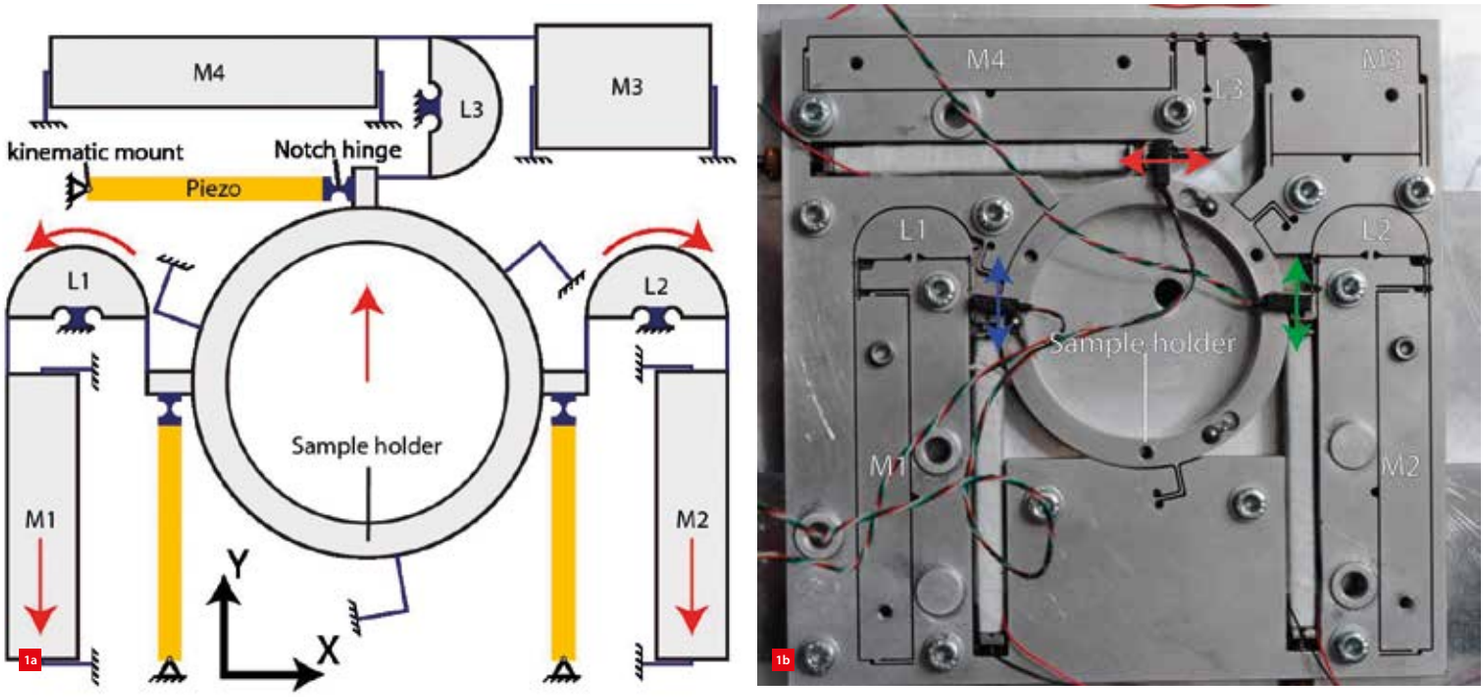

1 *The flexure mechanism.*
(a) Schematic.
(b) Realisation, with arrows indicating accelerometer measurement directions.

Attached to the ring are three levers (L1, L2, L3), which connect the ring to the counter masses (M1-M4) and achieve a motion in the opposite direction. The levers are connected to the ring and counter masses through wire springs, and connected to the base by flexure hinges. The counter masses are suspended with parallel leafsprings.

In the Y-direction, the ring is actuated by two piezo actuators. In the X-direction, a single piezo actuator creates motion. The piezo actuators are mounted with a kinematic mount on the base side and flexure hinges on the ring side. The design as a whole is kinematically constrained.

The red arrows indicate a movement in the scanning motion (Y-)direction. When the ring moves in the Y-direction, the levers L1 and L2 will actuate countermasses M1 and M2 in the opposite direction of the ring. If the momentum of the counter masses remains equal to that of the ring, the total reaction force of the mechanism remains zero. Because the counter masses are symmetrically placed on both sides of the ring, no moment is created.

When the ring moves in the X-direction, lever L3 actuates counter masses M3 and M4 in the opposite direction of the ring. This compensates the reaction force of the ring, but still leaves a reaction moment. Compensating the X-direction is not absolutely necessary, because the force created by the stepping motion is several orders lower than forces created by the scanning motion. However, because the suspension for a high-accuracy stage often has low rigidity in the X- and Y-direction, but a high torsional rigidity, the design choice was made to exchange the reaction force with a reaction moment.

Experiments

The physical mechanism is shown in Figure 1b. It was produced by wire-EDM and bolted onto a 250 x 250 x 10 mm³ aluminum 'base plate' in order to create a high in-plane rigidity. Set screws with lock nuts were used as the kinematic mounts; the set screws also serve to preload the piezo actuators. The piezo actuators were glued with epoxy to the ring to ensure they do not slip.

The frequency response of the mechanism was tested using three accelerometers (red, blue and green arrows in Figure 1b). The two piezo actuators in the Y-direction were simultaneously given a single sine sweep input. Figure 2 shows the F/x frequency response function of the system.

The first eigenfrequencies of the mechanism appear at 1,400 Hz. All modes are a combination of rotations and translations, possibly because the degrees of freedom of the system are all interconnected, and because the design is asymmetric. Any translational mode will also excite some rotational motion, and the pole of rotation for rotational modes is not in the centre of the ring. Therefore, left and right Y accelerometers in the frequency response do not measure exactly the same signal.

The first eigenmode is mainly a resonation of the X actuation direction. In this direction only a single piezo actuator provides rigidity for the two counter masses and

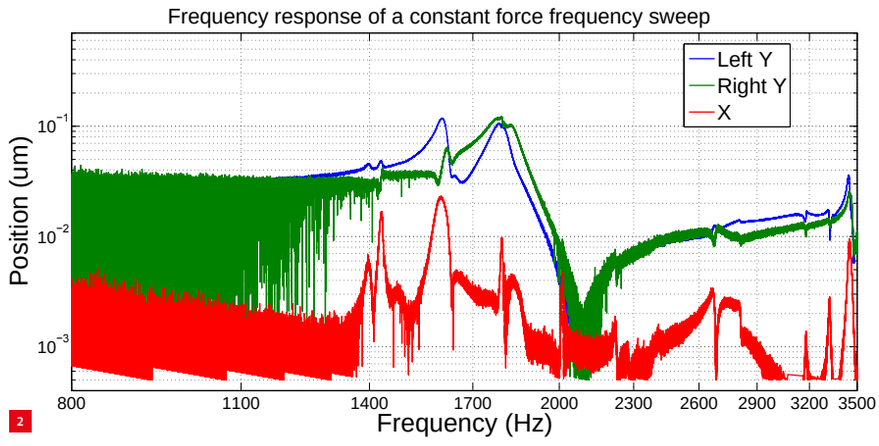

2 *Frequency response measurement of the mechanism when actuated in the Y-direction.*

ring, resulting in a lower natural frequency than in the Y-direction. The measured eigenfrequencies were confirmed with analytical models and a finite-element model analysis within 5% accuracy.

To measure the reaction forces of the mechanism, the flexure mechanism with base plate was suspended by ropes, creating a suspension with minimal planar stiffness. Accelerometers were placed on the ring, and on the base of the mechanism. Figure 3 shows a side view of the test set-up.

If the ring were to accelerate without reaction force compensation, the base of the mechanism would create an equal and opposite momentum to the momentum of the ring by accelerating in the opposite direction of the ring. However, when the reaction force is compensated, the base of the mechanism shows a reduced response. By comparing the theoretical acceleration with the measured response, a conclusion can be drawn on the effectiveness of the system.

During measurements, significant parasitic vibrations were measured by the accelerometers. The reaction forces of the ring and counter masses are internally compensated, but also create stresses. These stresses cause out-of-plane bending and in-plane deformations, which are recorded by the accelerometers. When the base plate was physically held by hand, these vibrations could be detected as well. Measurements were attempted with accelerometers on the side of the base plate. However, because of the out-of-plane vibrations, the accelerometers measured a signal up to 10 times higher than the actual acceleration of the centre of mass of the test set-up.

With the help of stress simulations, a location was found where vibrations caused by internal reaction forces did not affect the measurement. Measuring in this location, the counter masses were tuned to the correct weight to create an equal and opposite momentum to the ring. When the counter masses were tuned to a different weight, the measured accelerations significantly changed.

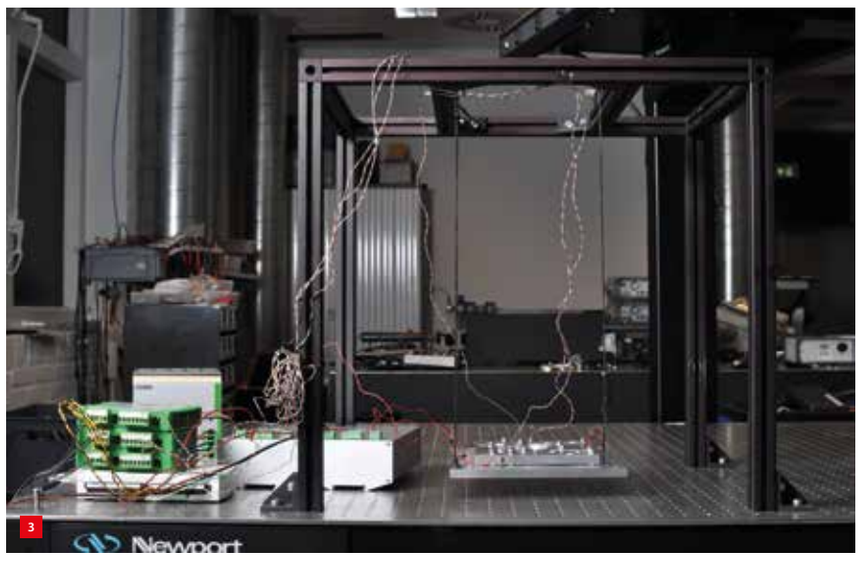

3 *Suspension of the flexure mechanism with base plate, for measuring reaction forces.*

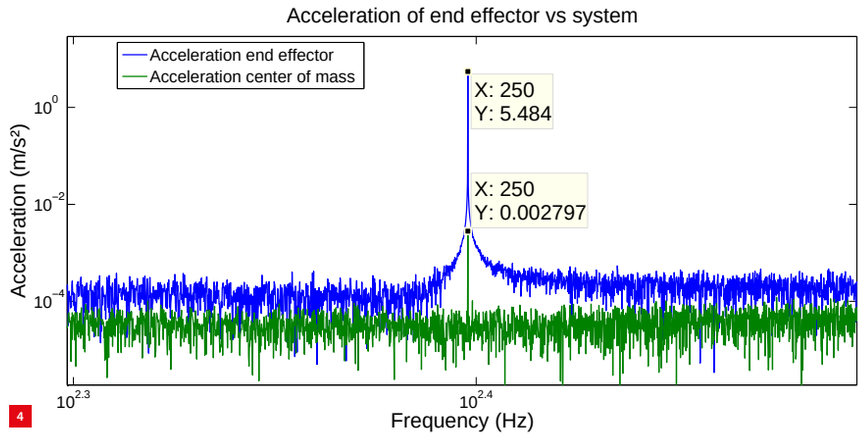

4 *Accelerations of the end-effector and the centre of mass, as measured in the optimised measurement location.*

Figure 4 shows the results of the optimised measurement. A pure sine wave of 250 Hz was used as input signal. A Fourier transformation was used to extract the magnitude of the measured accelerations. When corrected for the mass difference between the ring (the end-effector) and the base, the measurement shows that the base of the mechanism accelerates by a factor 1,960 less than the ring. When accounting for the mass difference between the ring and the base, the reaction forces of the ring are reduced by approximately a factor 50. Because of the complex parasitic vibrations and the reaction moment, there was no location on the test set-up that could provide useable data to measure force compensation in the X-direction.

Discussion

It has therefore been proven that it is possible to reduce the reaction forces of a flexure-based mechanism using passively actuated counter masses. However, further research is needed before such a concept can be practically implemented in a real-world system.

Because internal stresses caused parasitic vibrations, it was difficult to reliably measure the movement of the centre of mass during actuation. Lower frequencies had to be completely excluded from measurements because the parasitic motions totally overpowered the movement of the centre of mass in the lower frequency ranges. The X-direction could also not be reliably measured as a result of parasitic deformations.
Additionally, vibrations can also transfer reaction forces. In a real system, any connection point of the stage to its surroundings should be free of deformations, vibrations or displacements caused by internal reaction forces.

New designs should aim to reduce parasitic motions as much as possible. To achieve this, designing a more rigid base is paramount. Furthermore, by means of a symmetric design additional nodes of vibration can be created, increasing the amount of measurement points. Experiments should be designed to more reliably measure the reaction force of the mechanism.

Conclusion

A novel flexure-based high-accuracy scanning mechanism has been presented in this article. The mechanism features passively actuated counter masses that reduce the reaction force. The design has been built and tested. The lowest natural frequency of the mechanism was found at approximately 1,400 Hz. The reaction forces of the mechanism were measurably reduced by a factor 50. However, reaction force compensation resulted in internal stresses, which caused the base of the mechanism to deform.

This design provides the first step in effectively using passive reaction force compensation in flexure-based mechanisms. ■

REFERENCES

[1] Marsman, H.J.B., et al., "Mechanical scan system for microscopic applications", *Review of Scientific Instruments,* 54, 1983.
[2] Song, S., and Zhang, M., "A Study of Reactional Force Compensation Based on Three-Degree-of Freedom Parallel Platforms", *Journal of Robotic Systems*, 12, pp. 783-794, 1995.
[3] Van der Wijk, V., Herder, J., and Demeulenaere, B., "Comparison of various dynamic balancing principles regarding additional mass and additional inertia", *Journal of Mechanisms and Robotics*, 1(4), 04 1006, 2009.
[4] Papadopoulos, E., and Abu-Abed, A., "Design and Motion Planning for a Zero-Reaction Manipulator", *Proceedings of the IEEE International Conference on Robotics and Automation*, San Diego, California, 1994.
[5] Engelen, J.B.C., et al., "A mass-balanced through-wafer electrostatic x/y-scanner for probe data storage", *Microelectronic Engineering*, 86(4), pp. 1230-1233, 2009.

ALICE POWERED BY ALICIA

In the spring of 2015, IBS Precision Engineering was awarded a major contract by CERN as part of the ALICE detector upgrade project. Just over one year later, the first sensor module assembly machine, called ALICIA, that was developed and constructed for this upgrade by IBS, passed the site acceptance test at CERN. Six more machines will be delivered by IBS to sites around the globe. Key success factors of the ALICIA development project were system integration and flexibility.

IBS Precision Engineering, with 30 employees and its headquarters in Eindhoven, the Netherlands, is an expert in metrology and developer/supplier of solutions to measurement, positioning and motion systems demands where ultra-high precision is required. For IBS, the contract with CERN was a follow-up to the metrology software it provided for assembly machines for the original ALICE detector.

Detector upgrade

ALICE (A Large Ion Collider Experiment) is one of the four detectors of the Large Hadron Collider (LHC), CERN's well-known flagship. It is a general-purpose, heavy-ion detector, designed to address the physics of strongly interacting matter, and in particular, the properties of the quark-gluon plasma, using nucleus-nucleus collisions at high energies.

During the LHC shutdown in 2019 and 2020, CERN will upgrade the ALICE central barrel detectors (Figure 1) with a new low-material and high-resolution 7-layer tracker (Inner Tracking System, ITS) based on monolithic silicon pixel detectors in order to greatly improve features like spatial resolution, tracking efficiency and read-out rate capabilities.

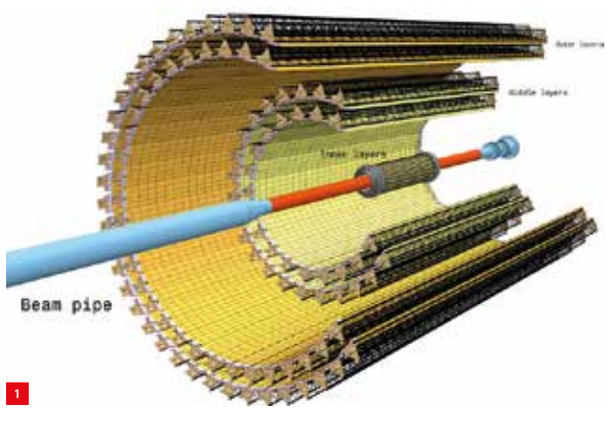

1 *The detector configuration of ALICE's Inner Tracking System.*

Sensor pixels

The new ITS consists of seven concentric layers of pixel detectors, so-called Monolithic Active Pixel Sensors (MAPS), based on a 0.18μm CMOS process. The basic MAPS element is a pixel chip consisting of a single silicon die of about 15 mm x 30 mm, built on a high-resistivity silicon epitaxial layer (sensor-active volume), which incorporates a matrix of charge collection diodes (pixels) with a pitch of the order of 30 μm, and the electronics that perform signal amplification, digitisation and zero-suppression. Only the information on whether or not a particle was crossing a pixel is read out.

Automatic assembly

The contract with IBS involved precision engineering for this advanced upgrade. IBS was commissioned to develop and construct an automatic assembly system – aptly called ALICIA (acronym for ALICE Integrated Circuit Inspection and Assembly machine), after IBS's habit to give all its machines a female name – and supply seven of these stand-alone machines, to CERN and six other institutes around the globe – to a large degree they are copies, but each system will have its own site-specific details. CERN itself will use the machine to manufacture the modules for the innermost layer, which entails the highest demands on assembly accuracy.

The automatic assembly system is to produce the sensor modules by high-accuracy sensor array positioning and interconnect. The sensor chips are only 50 or 100 μm thick and require ultra-precision laser soldering of no less than 67 interconnects per chip. The soldering has to take place under vacuum to avoid contamination. For the ITS upgrade, tens of thousands of frames have to be manufactured, with each frame taking up 2 hours of production time. Here, the soldering process is the limiting factor.

Pick & place and inspection

The ITS detectors comprise of sensor modules, i.e. frames each containing 14 chips. ALICIA (Figure 2) has to pick up

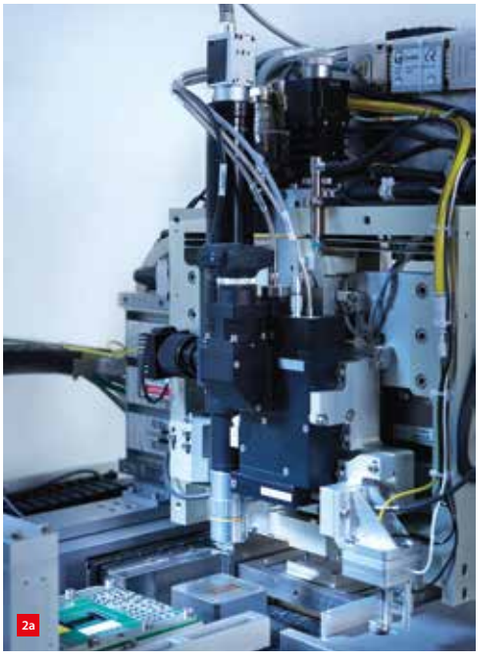

each (fragile) chip from a supply tray, place it accurately on a stage using position markers measured by the vision system, inspect it, then place the chip on the frame and solder all interconnects. Precise assembly and inspection of the sensor modules are of course crucial for the accurate and reliable detection and identification of collision products.

In order to give ALICE the required accuracy, the position of the individual chips with respect to the local reference markers is crucial. In order to achieve this, a high-accuracy (< 0.1 µm) image system was developed to measure both the reference and chip marker, determining the final positioning of the chip. In combination with high reproducibility of the lateral X and Y axis, the chip can be manipulated with sub-micron accuracy, achieving a final assembly accuracy of < 5 µm over the full array of chips. In the vertical (Z) direction, a compliancy in combination with a high-resolution displacement sensor is used to accurately determine first contact with the chip, to avoid damaging the delicate chips.

Inspection of the chips pertains to the electronics as well as the mechanics. Visual inspection of the chips is used to reveal possible fractures and determine the cleanliness. Also the dimension of the chip is measured with a required accuracy of better than 0,8 µm. After assembly, another inspection of the complete frame is performed. This whole process, including the full inspection of one module generates 0.5 terabytes of information. The collection and processing of this amount of big data was an additional challenge IBS had to resolve.

Flexibility

IBS based its design of the machine on proven technologies for metrology, pick & place, soldering and inspection. The biggest challenge, according to Theresa Spaan-Burke, Innovation Director at IBS, was system integration, in combination with flexibility: "The specifications by CERN included some 500 parameters and these were still subject to change during our design phase. So a lot of flexibility was required from our side and we incorporated this flexibility as much as possible in the design to accommodate last-minute changes. In fact, on some aspects we exceeded the specifications in anticipation of future CERN demands." The rock-solid foundation underlying this flexible approach is the rigorous procedure for process qualification that IBS follows: "This is what won the contract for IBS, in combination with our metrology expertise."

To be continued

To warrant undisturbed operation – the time schedule towards the actual ITS upgrade starting in 2019 is tight – IBS provides online machine support to each production site. A one-day operator training accompanies the delivery of a machine. Now that the first machine (Figure 3) passed the site acceptance test at CERN, IBS will commence construction of the next systems, for which software expansions and upgrades are foreseen. CERN will keep on raising the bar in the quest for understanding quark-gluon plasma physics. ■

INFORMATION
ALICEINFO.CERN.CH/ITSUPGRADE
WWW.IBSPE.COM

2 *The ALICIA sensor module assembly machine. (Photos: Nicole Minneboo)*
(a) Overview.
(b) The chip placement module.
(c) Visual inspection unit.
3 *ALICIA in all its glory.*

Program DSPE Conference 2016
Tuesday October 4

09.30	**Arrival and coffee**
10.00	**Welcome**
10.10	**Exponential technologies to solve humanities great challenges** Maarten den Braber, Singularity University Netherlands
10.55	**Break**
11.15	**How to measure a gravitational wave from a binary black hole merger** Jo van den Brand, VU Amsterdam, National Institute for subatomic Physics Nikhef
12.00	**Plenary introduction of demonstrations & posters**
12.10	**Lunch**
13.10	**Visit to demonstrations & posters**
	SESSION 1 System design 1
14.10	**System design of the next generation wafer tables for the die sorter machine NXP** Thijs Kniknie, NXP Semiconductors
14.30	**Large dynamic range atomic force microscope development** Stefan Kuiper, TNO Technical Sciences
14.50	**Wafer feeder capability in iX Hybrid** Rik van der Burg, Kulicke & Soffa - Emiel Nuijten, Sioux CCM
15.10	**Break**
	SESSION 2 Big science
15.40	**Cryogenic mechanisms for infrared astronomical instrumentation** Gabby Aitink-Kroes, NOVA Optical Infrared Instrumentation Group
16.00	**Development of automated assembly machines for the particle tracking system of the ALICE detector upgrade at CERN** Ivo Widdershoven, IBS Precision Engineering
16.20	**Actuator concept to align 4000 quadrupole magnets in the Compact Linear Collider** David Tshilumba, European Organization for Nuclear Research, CERN and Delft University of Technology
16.40	**Visit to demonstrations & posters**
	SESSION 3 Advanced applications
17.40	**High-Density Optical Fiber-to-Chip Interface** Roy Derks, MA3 Solutions
18.00	**XY360° planar positioning stage with ferrofluid bearings** Stefan Lampaert, Delft University of Technology
18.20	**Multibody-based topology synthesis method for large stroke flexure hinges** Mark Naves, University of Twente
20.00	**Dinner and social event**


Maarten den Braber


Jo van den Brand


Thijs Kniknie


Stefan Kuiper


Rik van der Burg


Emiel Nuijten


Gabby Aitink-Kroes


Ivo Widdershoven


David Tshilumba


Roy Derks


Stefan Lampaert


Mark Naves

More information on the program in the September issue of Mikroniek; for general information see www.dspe-conference.nl

Program DSPE Conference 2016
Wednesday October 5

08.30	**Future in cancer care with advanced light technology** Sanjeev Pandya, Advanced Oncotherapy
09.20	**Break**
	SESSION 4 Pioneering new applications
09.40	**High volume harvesting machine for white asparagus** Ad Vermeer, Cerescon
10.00	**Precision engineering in a seismic environment** Björn Bukkems, Seismic Mechatronics, MI-Partners
10.20	**Transformation of a planar Maglev systems to new application areas** René Boerhof, Philips Innovation Services
10.40	**Break**
	SESSION 5 Special topics
11.00	**Advanced Feedforward, Repetitive, and Iterative Learning Control for Industrial Printing Systems** - Lennart Blanken, Océ and Eindhoven University of Technology
11.20	**Reliable nanoscale measurements in the production line** Richard Koops, VSL Dutch Metrology Institute
11.40	**Large signal non-linear analysis and validation of the suspension of a transport tool** Araz Abbazi, NTS Group
12.00	**Lunch**
13.00	**Visit to demonstrations & posters**
	SESSION 6 Vibration control
14.00	**Vibration Damping For 2D Image Quality** Rob Gielen, Philips Healthcare
14.20	**Vibration Isolation applied to Coriolis Mass-Flow Meters** Bert van de Ridder, Demcon Advanced Mechatronics Wouter Hakvoort, Demcon Advanced Mechatronics and University of Twente
14.40	**Enabling overlay/focus improvement via passive damping in ASML motion stages** Stan van der Meulen, ASML Research Mechatronics & Control
15.00	**Break**
	SESSION 7 System design 2
15.20	**Mechatronics of a sub-milliNewton tribometer** Sander Paalvast, Janssen Precision Engineering
15.40	**Slicer module for large volume reconstruction workflow** Ron van den Boogaard, FEI
16.00	**Large flat surfaces in a high temperature vacuum environment** Rob Boereboom, VDL Enabling Technologies Group
16.20	**Break**
16.30	**Best contribution award & closing**


Sanjeev Pandya


Ad Vermeer


Björn Bukkems


René Boerhof


Lennart Blanken


Richard Koops


Araz Abbazi


Rob Gielen


Bert van de Ridder


Wouter Hakvoort


Stan van der Meulen


Sander Paalvast


Ron van den Boogaard


Rob Boereboom

SUBMICRON PRECISION WITH A SUBWAVELENGTH LASER SPOT

When microprocessing a surface with a laser, the accuracy is limited due to the relatively large dimension of the spot. Optical diffraction confines its minimum diameter to about half the wavelength. But Ulf Quentin succeeded in making much smaller spots by applying the principle of near-field optics. An extra contribution to his dissertational work was optical trapping, which enabled the highly accurate manipulation of his extremely small spot when scanning a surface.

FRANS ZUURVEEN

In 2014, Ulf Quentin obtained his doctorate with a thesis titled "Laserbased Nanostructuring with Optically Positioned Micro Lenses". He performed his optical experiments at the Lehrstuhl für Photonische Technologien (LPT), in English: Chair of Photonic Technologies at the University of Erlangen-Nuremberg, Germany [1] [2].

The feasibility of Quentin's optical system has been demonstrated by several microtechnological experiments, among them the writing of the letters LPT with an optical resolution of about 100 nm on a flattened polyimide surface, see Figure 1. The LPT group is investigating the medical application of this technique for opening living cell walls. But more interestingly, precision-technological applications are the direct writing of integrated-circuit patterns on silicon wafers and other laser machining operations with submicron accuracy.

AUTHOR'S NOTE

Frans Zuurveen is a freelance text writer who lives in Vlissingen, the Netherlands. The author acknowledges the input by Ulf Quentin, head of the industry management team for microtechnologies at Trumpf Laser- und Systemtechnik GmbH in Ditzingen, Germany.

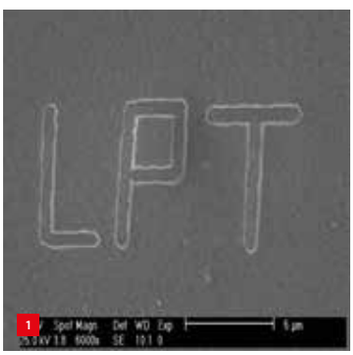

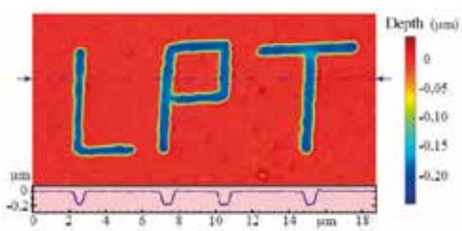

1 *The letters LPT written with an optical resolution of about 100 nm on a flattened polyimide surface.*

Laser spot dimensions

When focusing a laser, the imaging spot shows a pattern with a central high-intensity spot surrounded by concentric rings with decreasing intensity, see Figure 2. This is called an Airy pattern with a central Airy disc and is named after George Biddell Airy, who described this phenomenon due to optical diffraction in 1835. In the pattern of concentric rings, the dark rings correspond with path differences of $(N + ½)\cdot\lambda$, with N being a whole number and λ the wavelength. Such path differences cause phase differences of π rad or 180°, meaning cancellation of the light intensity: darkness. The bright lines correspond with $N\cdot 2\pi$ phase differences: doubled intensity.

The diameter of the central spot is proportional to the wavelength of the laser light and inversely proportional to the numerical aperture of the objective focusing the parallel laser beam. The spot diameter value is strongly correlated with the outcome of Rayleigh's criterion, defining the optical resolution d: $d = 0.61\cdot\lambda_0/NA$, with λ_0 representing the wavelength in vacuum and NA the numerical aperture. NA is defined as $n\cdot\sin\theta$, with n representing the index of refraction and θ the half-angle of the cone of light that exits the focusing lens. This rather arbitrary but widely used resolution criterion states that two point sources can still be distinguished when the two Airy patterns are farther apart than the limiting distance in which the maximum of one source coincides with the first dark line in the pattern of the second source. This explains why d equals a little bit more than half the spot diameter.

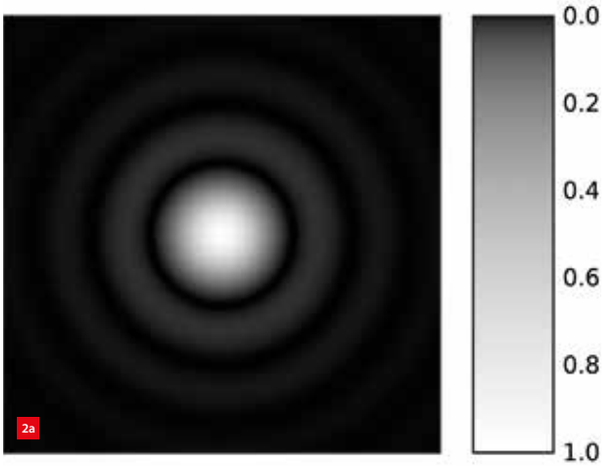

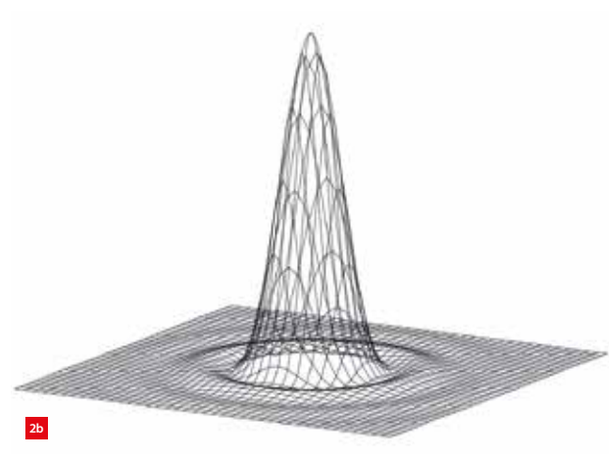

2 *The imaging spot of a focused laser beam shows an Airy pattern. (Illustrations: Sakurambo at English Wikipedia)*
(a) The diffraction pattern.
(b) 3D representation: light intensity as a function of 2D position.

The foregoing makes it clear that even with a high-aperture lens with $\theta = 45°$, the minimally attainable spot diameter equals about half the wavelength. This means that when using visible light, optical diffraction limits the dimension of the laser spot to about 250 nm, which is too large to write patterns with submicron precision. The solution to this problem is the application of near-field optics.

Near-field optics

Near-field optics considers the propagation of light no farther than one wavelength when the waves move from one material to another with a different index of refraction. The amplitude of such an evanescent wave decays very fast exponentially but the good news is that the effect of optical diffraction does not occur because this is a far-field phenomenon associated with phase differences between propagating light waves.

Near-field optics has been applied in the NSOM, the Near-field Scanning Optical Microscope, resembling an AFM, Atomic Force Microscope, but applying a different physical effect for keeping a constant distance between detector and surface. For NSOM, a rather complicated optical feedback control system has been developed. AFM uses an extremely sharp tip, whereas NSOM uses a sharp hollow tip, of which the aperture, with a diameter between 10 and 20 nm, allows visible light to exit. The NSOM tip moves across the surface at a constant distance much smaller than one wavelength.

Another application of near-field optics is CPLA: Contacting Particle Lens Array patterning. Thanks to this technique, a regular pattern of tiny submicron-sized holes can be made in a flat substrate by deposing an equally-sized pattern of spherical transparent particles on the substrate surface. Each particle has a diameter of less than 1 µm. Illuminating this collection of particles with parallel laser light produces a dimensionally equal collection of spots with submicron dimensions thanks to the diffractionless near-field optical behaviour. The spots then produce holes, as shown in Figure 3.

Such a system of tiny spheres is acquired by putting a drop of fluid with diluted particles on the substrate. After evaporation of the fluid a hexagonal pattern of spheres on the surface remains.

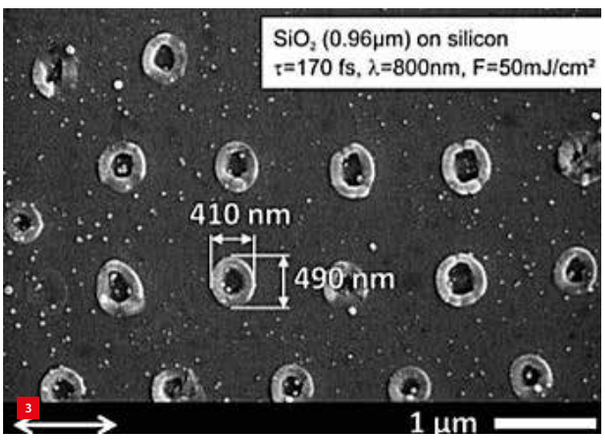

3 *A hexagonal submicron pattern on silicon produced by CPLA: Contacting Particle Lens Array patterning.*

Optical trapping

Making a regular pattern of submicron holes is scientifically interesting, of course, but a more significant application would be the manipulation of only one submicrometer lens across the substrate surface. Therefore, Ulf Quentin applied the principle of optical trapping, or otherwise formulated the use of optical tweezers. This procedure was first reported in 1970 by Arthur Ashkin of Bell Labs [3].

Optical trapping means that a tiny glass sphere cannot leave the centre of a tightly focused laser beam, because of the property of light that it has a momentum. When moving out of the beam centre, the extremely small forces acting on the sphere are no longer in equilibrium, forcing the sphere back to the centre. The resulting force is not very large – only some picoNewtons – but sufficient to move a glass sphere with a diameter of 1 µm across a surface. The movement of the substrate with a piezo-electric drive enabled Quentin to accurately displace the laser spot with subwavelength dimensions across the substrate surface.

More details

Figure 4 shows in more detail the optical-trap-assisted structuring system developed by Quentin. The spot on the surface is being created by a pulsed laser. The figure indicates the laser pulses as successively moving discs. The beam that traps the particle, which is a transparent sphere about 1 µm in diameter, is created by a continuous-wave (cw) laser. This beam can be accurately moved across the surface, as explained before. In this way, submicron-scale structures can be produced thanks to the optical near-field below the particle.

The complete set-up is illustrated in Figure 5. The pulsed laser and the continuous laser emit their beams through a high-aperture (*NA* = 1.2) water-immersion objective via semi-transparent mirrors. A CCD camera observes the sample to be treated.

To conclude

Up until recently, the accuracy of laser machining and direct writing was limited by the relatively large dimensions of the laser spot. Ulf Quentin succeeded in overcoming this fundamental problem by applying two optical principles: near-field optics and optical tweezers. His work has not only had scientific significance, but also has helped to improve the resolution of direct writing. Of course, this technology has a much lower throughput than circuit projection with ASML wafer steppers. But parallel processing with more optical traps will improve the speed of this sophisticated method of direct writing in the future. ■

INFORMATION
WWW.TRUMPF.COM
WWW.AOT.UNI-ERLANGEN.DE

REFERENCES

[1] "Pushing the boundaries", *Laser Community* 21/2015, Trumpf, www.laser-community.com/en/pushing-the-boundaries

[2] U. Quentin, K.-H. Leitz, L. Deichmann, I. Alexeev and M. Schmidt, "Optical trap assisted laser nanostructuring in the near-field of microparticles", *Journal of Laser Applications*, July 2012.

[3] A. Ashkin, "Acceleration and Trapping of Particles by Radiation Pressure", *Phys. Rev. Lett.* 24, pp. 156-159, 1970.

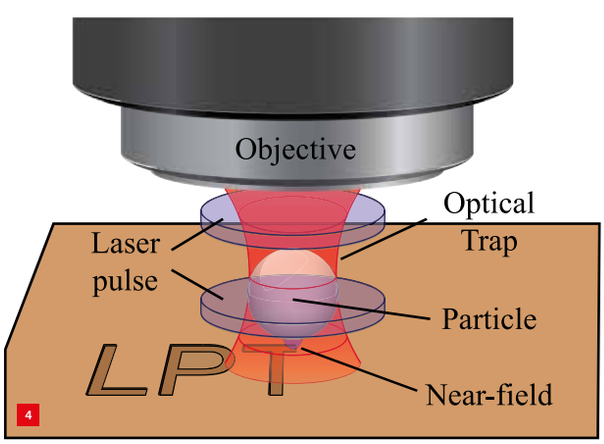

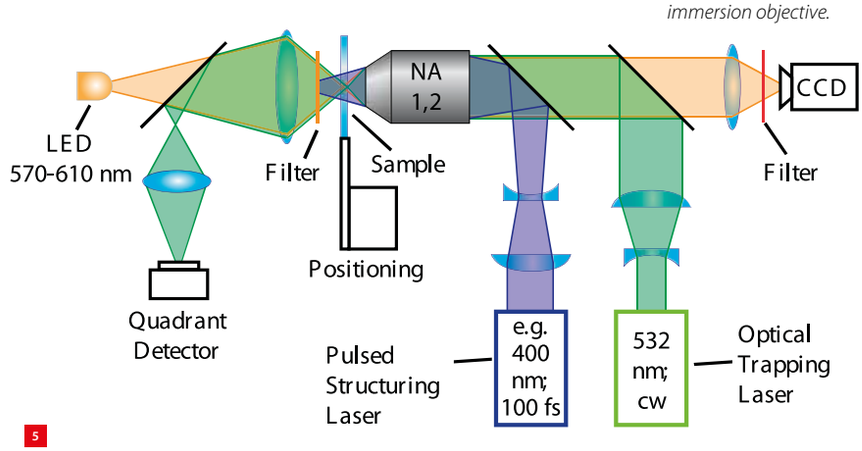

4 *The optical-trap-assisted structuring system. Laser pulses, indicated as moving discs, create spots on the surface. A continuous-wave laser traps the particle.*

5 *The complete optical set-up. The pulsed laser and the continuous laser emit their beams through a high-aperture water-immersion objective.*

IS THERE A ROBOT IN THE ROOM?

Can the use of robotics lead to better healthcare and improve quality of life? What role do humans play in this? These and other questions were the focus of a well-attended congress hosted by LEO Robotics. Robots are already being used in different ways in the manufacturing industry and healthcare sector, but can they completely take over manufacturing or healthcare? A lot is happening, but with successful applications of robots, humans are often still the ones pulling the strings and they don't want to let go.

Germany is the prime example of a country where the classic industrial robot was set up in a factory behind a fence and carried out its pre-programmed tasks all alone. Researchers are, however, making robots more intelligent so that they are suitable for carrying out various tasks and better able to respond to unpredictable environments. This will enable industrial robots to carry out more complex tasks together with human operators. These robots are known as collaborative robots.

Socially intelligent robots

The collaboration between humans and robots doesn't just open up new possibilities in the manufacturing sector, but in other sectors as well, such as healthcare, where collaboration and social behaviour are of even greater importance. The research into socially intelligent robots is, however, in its infancy, as revealed by Vanessa Evers, professor of Human Media Interaction at the University of Twente (UT), during her keynote speech at the congress that was held in the DesignLab at UT.

Industry and healthcare at the first LEO Robotics Annual Congress

On 21 April 2016, LEO, Center for Service Robotics, hosted its first Robotics Annual Congress in Enschede, the Netherlands. Over 300 people attended the event that had a varied programme with speakers from both the manufacturing and healthcare sectors, as well as demonstrations of different robots. The congress was opened by Onno van Veldhuizen, Mayor of Enschede, Eddy van Hijum, representative for economy of the province of Overijssel, and Ed Brinksma, Rector Magnificus of the University of Twente (UT), the Netherlands.

Vanessa Evers, professor of Human Media Interaction at UT, delivered the keynote speech about socially intelligent robots.
The business community delivered two presentations on Smart Industry and collaborative robots:

- Mark Peters, improvement manager at IJssel Technologie: "How to utilize robots 'smartly' in industry"
- Martin van den Heuvel, team leader of Projects, Asset Integrity and Inspection at Shell Global Solutions: "Robots for maintenance and inspections of pressurized equipment in oil and gas"

Robotics in healthcare was also an important theme, with a total of three presentations about cure, care and rehabilitation:

- Koert de Jong, a surgeon at the University Medical Center Groningen, and Benno Lansdorp, business developer at Demcon: "Needle steering with robotics: the new treatment for liver tumours"
- Jorrit Ebben, business development manager at Siza: "The collaboration between robot, user and technician"
- Hans Rietman, professor of Rehabilitation Technology at UT and a rehabilitation specialist at Roessingh Research & Development (RRD): "Rehabilitation with robots: are therapists replaceable?"

The LEO foundation was established in 2010 as a joint venture between organisations involved in the Netherlands' robotics ecosystem. This ecosystem is growing quickly and now comprises 20 organisations from various domains that are all related to robotics, such as UT, Saxion University of Applied Sciences and RRD, plus many companies. During the congress, the members shared their knowledge and expertise through demonstrations of around 35 robots and robotic systems.

WWW.LEOROBOTICS.NL/CONGRESS

Situations where children are playing and learning are perfect opportunities for studying the interaction between humans and robots. Children have a kind of open-mindedness in their interaction with robots – it's as if they are playing with dolls, just like elderly people with dementia who spontaneously hug a seal robot. If robots are going to enter society, for example in healthcare to deal with the ageing of both carers and patients, then we will all have to take on some of that open-mindedness. But this is yet to happen, in terms of both robot and human development.

Robots have to learn a lot before they are able to 'read' busy, unstructured environments and find their way. One of the big challenges is interpreting the signals (emotions) that people emit. Evers cannot yet picture fully autonomous operating robots, that often have the upper hand in popular imagination. "You can delegate tasks to a robot, but not a complete role."

Attentive care

Robots can support patients in their everyday lives. One of the healthcare institutes that is experimenting with this is Siza (originally from Het Dorp ('The Village') in Arnhem, the Netherlands, where, 50 years ago, people with disabilities could live independently for the first time).

One example of this technology is care robot Rose, who can instruct carers remotely. Last year, it became apparent that robot technology was not adequate enough yet for the intended commercial healthcare applications, but Siza has initiated many of these experiments, said Siza's Jorrit Ebben during the LEO congress. "Develop and implement this kind of technology and communication together with clients and employees. Ensure that the user, technician and robot can spend more time together in order to learn from each other." That is why Ebben pushed for a different approach: user-centered, practice-based evidence that should be arranged in a Siza Robot Experience Centre.

There are many other developments happening of course, as demonstrated at the congress by Focal Meditech and its new robot Othello. Unlike robot Rose, Othello will be completely controlled by the client and must, in this way, contribute more to his autonomy and independence.

Effective rehabilitation

Robots have been known in rehabilitation for longer, for example, they have been used in the treatment of stroke patients who need to relearn motor skills. This group of people lack the strength to practice intensive walking and hand function enough. This makes these sessions hard work physically for the therapists because of the weight of the patients.

According to Hans Rietman from Roessingh Research & Development (RRD), it appears after many years of scientific research that the support offered must correlate with the patient's capabilities. The patient must control their own movements as much as possible and only be supported when necessary. Robotic applications ensure that exactly the right amount of support is provided, so that rehabilitation is optimally effective and the therapist's workload is reduced. The point is that the robot can become an effective part of the rehabilitation process.

1 *In her keynote speech, UT professor Vanessa Evers discussed such things as experiments with the robot Spencer, who interacted with passengers at Amsterdam Airport Schiphol.*

2 *During the rehabilitation process, the patient must control their own movements as much as possible and only be supported by a robot when necessary, according to Hans Rietman from RRD.*

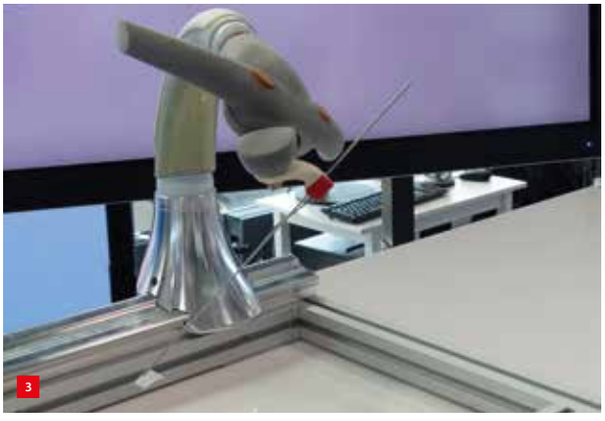

3 *Test set-up with the robot for needle steering.*
4 *Impressions of the first LEO Robotics Annual Congress.*

Precision with needles

It's no different in the world of cures. The famous surgical robot DaVinci has been around for years and is used for relatively simple procedures such as prostate operations. However, in many hospitals, the DaVinci is just gathering dust, partly because it seemed to intrude too much on standard practices. Perhaps it would be better to use the current surgical workflow as a starting point and only robotise critical procedures, says Koert de Jong, a surgeon from Groningen who treats liver cancer.

Liver tumours can be removed surgically, but this is a major operation that cannot always be repeated. An alternative is ablation (i.e. removing the tumour using radio or micro-wave radiation), in which a needle needs to be inserted into the liver. The surgeon inserts this needle by hand and this usually requires several attempts with the help of CT scan imagery to monitor the radiation exposure.

Enschede-based high-end technology supplier Demcon developed a robot for needle steering in collaboration with De Jong c.s. This robot accurately determines the correct orientation for the needle so that it can be positioned to enter the tumour as desired. The surgeon carries out the last step manually, so that they stay in control and can feel what they come across on the way. The robot only ensures that the initial prick happens more quickly, accurately and in a more patient-friendly manner.

The robot in healthcare

We can see that robots are being developed to help patients and to support and relieve carers across all areas of healthcare. These developments are taking place, slowly but surely. Doctors being replaced, as is feared, is not the case here. If there is one thing that was made clear during the first LEO Robotics Annual Congress, it is that the collaboration between all stakeholders, from technology developers to patients and from health insurers to healthcare institutes, is essential for an improved and sustainable healthcare system. Robots can provide support in some areas of care, but they cannot completely take them over. ■

First KIVI/LEO Bachelor Thesis Award for robotics

The first KIVI/LEO Bachelor Thesis Award for robotics was presented at the LEO Robotics Annual Congress 2016. The award seeks to stimulate interest in robotics among higher education students. Students from the University of Twente (UT) and Saxion University of Applied Sciences are eligible for this €1,000 award.
Three finalists were selected from the nominees to pitch their research:

- Louisa Schindler (UT): "Investigating an enhancement of the robot-child-relationship through additional enjoyment next to learning"
- Tom Lankhorst (UT): "Low-power, low-cost 1D Haptic Feedback on Embedded Platform"
- Stijn Lohuis (Saxion): "The Agile Eye"

You can read more about one or more of these studies in a forthcoming edition of Mikroniek. The judging panel, which included Dirk Bekke (a lecturer in Mechatronics at Saxion), Micaela dos Ramos (Director of the Royal Netherlands Society of Engineers, KIVI), Dennis Schipper (Director of Demcon) and Stefano Stramigioli (Professor of Advanced Robotics at UT), and the audience selected Tom Lankhorst as the clear winner.

The finalists for the KIVI/LEO Bachelor Thesis Award for robotics, from left to right, Stijn Lohuis, [day chair Janinka Feenstra], Louisa Schindler and Tom Lankhorst.

UPCOMING **EVENTS**

27 September 2016, Eindhoven (NL)
Photonic Integration Conference
Second edition of conference that covers the integration of photonics with microelectronics, cases in a variety of application areas, business models, and new (nano) materials.

WWW.PHICONFERENCE.COM

28 September 2016, Den Bosch (NL)
Bits&Chips Smart Systems 2016
Third edition of the annual event on embedded systems and software, focused on networked and technical information systems, from smart lighting to sophisticated diagnostic equipment.

WWW.BC-SMARTSYSTEMS.NL

4-5 October 2016, Sint-Michielsgestel (NL)
DSPE Conference on Precision Mechatronics
Third edition of conference on precision mechatronics, organised by DSPE. The target group includes technologists, designers and architects in precision mechatronics, who are connected to DSPE, Brainport Industries, the mechatronics contact groups MCG/MSKE or selected companies or educational institutes. This year's theme is 'Farmers, Pioneers and Precision Engineers', inspired by the discussion about sustainable business and prosperity generated from precision engineering know-how and the role that (new) application areas play.
See also the program on page 24 ff.

WWW.DSPE-CONFERENCE.NL

4-7 October 2016, Utrecht (NL)
World Of Technology & Science 2016
Four 'worlds' (Automation, Laboratory, Motion & Drives and Electronics) will be exhibiting in the Jaarbeurs Utrecht.

WWW.WOTS.NL

12 October 2016, Bussum (NL)
14th National Cleanroom Day
Event for cleanroom technology users and suppliers in the fields of micro/nano electronics, healthcare, pharma and food, organised by the Dutch Contamination Control Society, VCCN.

WWW.VCCN.NL

23-28 October 2016, Portland (OR, USA)
31th ASPE Annual Meeting
Meeting of the American Society for Precision Engineering, introducing new concepts, processes, equipment, and products while highlighting recent advances in precision measurement, design, control, and fabrication.

ASPE.NET

26 October 2016, London (UK)
The Future of Precision Engineering
The last outreach meeting of the EPSRC Centre in Ultra Precision. The activities over the past five years will be briefly reviewed and the majority of the event will focus on where precision and ultraprecision manufacturing is heading.

WWW.ULTRAPRECISION.ORG/NEWS/EVENTS

7-11 November 2016, Leiden (NL)
LiS Academy Summer School Manufacturability
Summer school targeted at young professional engineers with a limited knowledge of and experiences with manufacturing technologies and associated manufacturability aspects.

WWW.LISACADEMY.NL

16-17 November 2016, Veldhoven (NL)
Precision Fair 2016
Sixteenth edition of the Benelux premier trade fair and conference on precision engineering, organised by Mikrocentrum.

WWW.PRECISIEBEURS.NL

30 November 2016, Utrecht (NL)
Dutch Industrial Suppliers & Customer Awards 2016
Event organised by Link Magazine, with awards for best knowledge supplier and best logistics supplier, and the Best Customer Award.

WWW.LINKMAGAZINE.NL

13-14 December 2016, Amsterdam (NL)
International MicroNanoConference 2016
Microfluidics, photonics and nano-instrumentation are the main topics of this industry- and application-oriented conference, exhibition and demo event.

WWW.MICRONANOCONFERENCE.ORG

27 March 2017, Düsseldorf (GE)
Gas Bearing Workshop
Second edition of an initiative of VDE/VDI GMM, DSPE and the Dutch Consulate-General in Düsseldorf (Germany).

WWW.DSPE.NL/CENTRAAL/EVENTS/GAS-BEARING-WORKSHOP

HOW DO YOU AVOID JAMMING?

Jamming is a well-known problem during the assembly of parts with narrow tolerances (such as mounting a shaft in a hole). If the parts are not precisely aligned, they will get stuck and a high force is required to loosen them which often results in (unnoticed) damage on both parts. It is difficult to overcome jamming during the manufacturing process. However, if recognised during the design process, simple solutions to avoid jamming during assembly can be implemented.

TWAN SCHOUT AND ARNOLD SCHOUT

Introduction

A well-known and frequent problem during the assembly of parts with narrow tolerances is jamming (in Dutch: schranken), for example during the assembly of a gear on a shaft. Due to a small misalignment of the shaft and the hole in the gear, the parts get stuck. Pushing harder to force the shaft through the hole does not help, but only jams the shaft even more. A realigning force (read: hitting with a hammer) is needed to release the shaft.

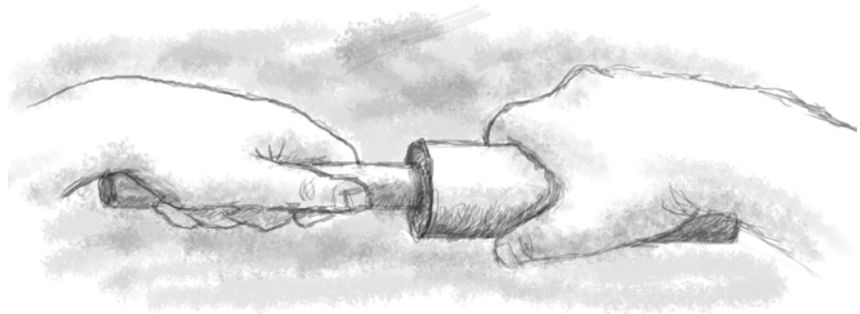

During the jamming and loosening of the parts, large forces will occur on small surfaces resulting in high local stresses (Hertz contact). These high stresses will lead to damage on both parts; this damage is often not noticed and the consequences are often unknown. To avoid damage, the clamping of the parts should be disengaged before they get stuck.

The problem of jamming occurs during assembly and can be solved with craftsmanship or, when recognised, with tooling which helps to align the parts within the angle under which jamming will not occur. However, this is not always easy to do, which means that the issue of jamming can be inherent to the design.

Therefore, it would be best to apply the Design for Manufacturing (DfM) methodology and solve the issue during the design stage instead of dealing with the problem during the manufacturing stage. When designed correctly, it should be possible to assemble a precise shaft-hole combination with just one hand.

A simple solution to avoid jamming is presented here. The first part of this article describes how to recognise during the design phase whether the risk of jamming is present. An equation is presented for identifying the risk of jamming, based on the geometry of the shaft and the hole, the angular position with respect to each other and the friction coefficient.

In the second part of this article, a practical solution is given as to how the design can be adapted to avoid jamming during assembly.
Finally, a methodology is proposed that includes the risk determination and design adaptations.

The risk of jamming

Usually jamming occurs during the initial positioning of the shaft in the hole. Especially if the gap between the shaft and the hole is small due to a small tolerance. As a result, the angle (α) between the shaft and the hole (Figure 1) under which the parts can be assembled without jamming, is small. This requires accurate placement of the parts. In manual assembly, this is left to the craftsmanship of the

AUTHORS' NOTE

Twan Schout works as an engineer at Schout DfM. Arnold Schout is the owner of Schout DfM, a consultancy in the field of design and manufacturability, based in Waalre, the Netherlands.

twan@schout.eu
www.schout.eu

operator but, especially in automated assembly, the required accuracy of the placement should be known beforehand.

A mathematical model was created to compute the accuracy required to assemble the parts without jamming.
A complete derivation is out of scope for this article, but is available on request. The model is based on the geometry and forces (friction, W, and normal, N) defined in Figure 2 and shows that the system becomes self-aligning if the insertion length (L_{in}) is large enough.

This insertion length can be described with:

$$L_{in} = [\ D_{hole} - D_{shaft} \cdot \cos\alpha\ ] \ / \ \sin\alpha$$

With D_{hole} and D_{shaft} representing the diameter of the hole and shaft.
Because the angle α is small, sinα ≈ α and cosα ≈ 1.

From the evaluation of forces (Figure 3), it follows that if $L_{in} > \mu D_{shaft}$, with μ representing the friction coefficient, the direction of the resulting force R_1 realigns the shaft with respect to the hole. In this case, the system is self-aligning and jamming will not occur.

The criterion $L_{in} > \mu D_{shaft}$ results in a maximum angle α_j for which no additional force is required to realign the shaft:

$$\alpha_j = [\ D_{hole} - D_{shaft}\ ] \ / \ \mu D_{shaft}$$

If the angle α during assembly is smaller than α_j, jamming will not occur.

Theoretical solution

As previously stated, jamming only occurs if the insertion length is too small. Therefore, jamming is avoided if the insertion length L_{in} is larger than the friction coefficient μ times the diameter of the shaft. Theoretically this can be done by making the end of the shaft ball-shaped.

The insertion length is elongated and because of the ball shape, it is easy to rotate the shaft without force. However, this theoretical solution has some disadvantages:
1. The effective length of the shaft is shortened.
2. Making the ball shape at the end of the shaft is an expensive process.

A more practical solution should increase the insertion length, but without these disadvantages.

Practical solutions

Two practical solutions to increase the insertion length are possible:
1. Adding a groove near the end of the shaft.
2. Adding a taper at the end of the shaft.

A groove near the end of the shaft
To avoid jamming, a groove is added to the end of the shaft. At the end, the shaft still has the same diameter as the original shaft, thus the effective length remains the same, but the insertion length is increased compared to the original shaft. The effect is shown in Figure 5.

If X and Y are chosen correctly (see Figure 5 for definition), the insertion length can now be described with:

$$L_{in} = [\ D_{hole} - 0.5 \cdot (D_{shaft} + D_1) \cdot \cos\alpha)\ ] \ / \ \sin\alpha$$

This groove is very easy and cheap to manufacture. A way to derive X and Y is available on request.

1 *The shaft-hole configuration.*
2 *Geometry and forces in the shaft-hole configuration.*
3 *Evaluation of friction (W) and normal (N) forces in the (non-) jamming situation.*
4 *Increasing the insertion length L_{in} by making the end to the shaft ball-shaped.*
5 *A groove added near the end of the shaft, to avoid jamming.*

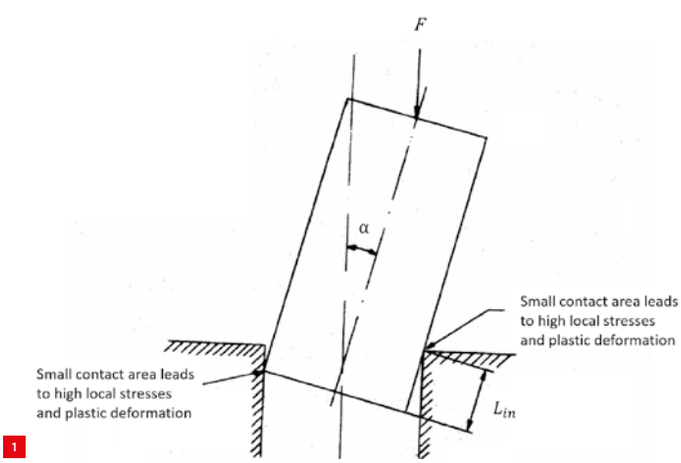

1

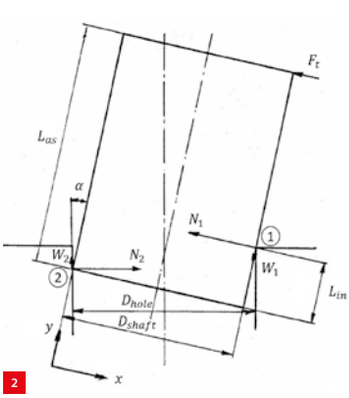

2

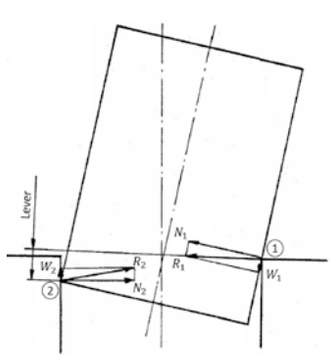

3

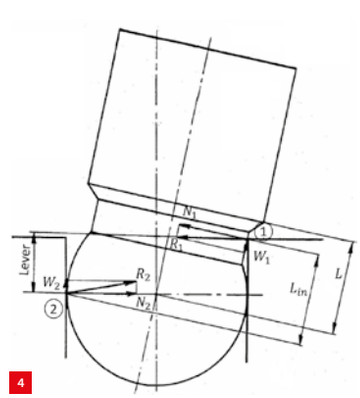

4

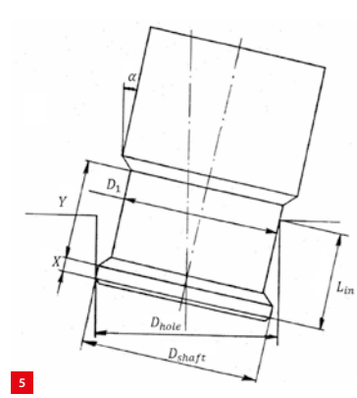

5

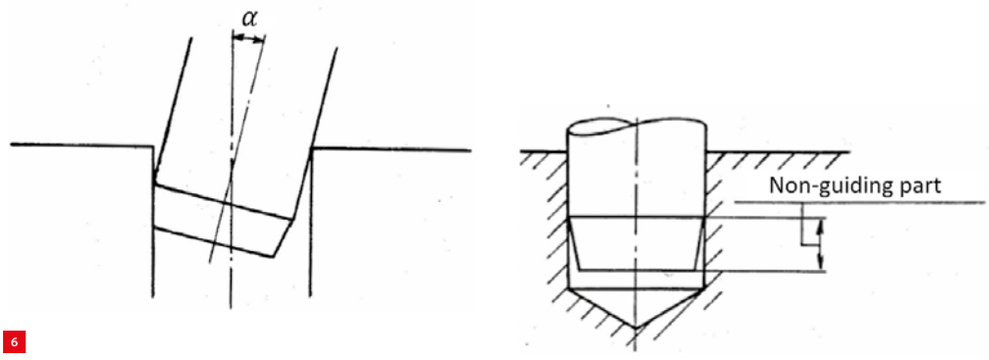

6

A taper at the end of the shaft

Another way to increase the insertion length is to add a large taper to the end of the shaft. The angle of the taper should be smaller than α and should be large enough to result in an insertion length $L_{in} > \mu D_{shaft}$. Common facets applied at the end of the shaft help position the shaft with respect to the hole but do not influence the jamming behaviour because the angle of the taper is too large to increase the insertion length.

Because α is small, the length of the taper can be too large for small gaps and large shaft diameters. The shaft cannot be used as a functional guide over the length of the taper.

Proposed design methodology

To avoid being surprised by jamming during the assembly stage, the following methodology is proposed:

1. Determine α_j.
2. In general, an operator cannot be expected to be able to assemble a series of fittings with α_j when it is smaller than a few degrees, without issues. The designer should realise jamming could become an issue and consider solving the jamming issue and take precautions.
3. When it is decided to create a groove near the end of the shaft (practical solution 1), the dimensions of this groove have to be determined. Start with determining X and D_1.
4. Once X and D_1 are known, Y can be calculated.
5. Check whether the calculated values for X, Y and D_1 are realistic.
6. Check whether the new value for α_j is such that jamming is not likely to occur.

Example

The jamming angle is dependent on the diameter and the gap between the hole and shaft. In Figure 7, the angle α_j is shown for varying nominal diameters with fitting H7/g6. The graph shows that for smaller diameters assembly is relatively easy, but for larger diameters the assembly is more difficult.

Enhancing the minimal gap will increase the angle under which jamming can occur and therefore make it easier to assemble the shaft. This is shown in Figure 8 for varying fittings in the case of a diameter of 100 mm. From these figures, it can be seen that large diameters and small gaps will increase the risk of jamming.

Conclusion

As shown, it is up to the designer to recognise the risk of jamming during the design phase instead of discovering the problem during assembly. If the risk of jamming is recognised, it can be removed in the design thus avoiding any trouble and damage during production/assembly.

Here, the solution has been shown for loose fittings. However, a similar principle can be applied to a press fit, for which the risk of jamming is always present. Assembly of a press fit often results in (unnoticed) damage, leading to different behaviour than designed. Avoiding jamming in a press fit requires a specific solution for each situation. The method to obtain these solutions is available but is beyond the scope of this article. ■

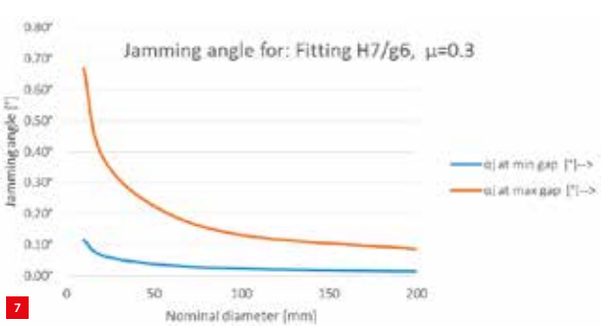

7

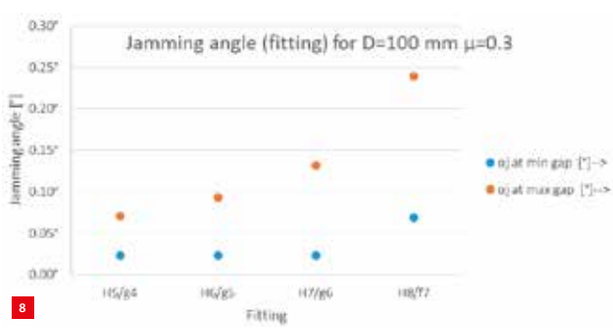

8

6 *A taper added at the end of the shaft, to avoid jamming.*
7 *Jamming angle as a function of the nominal diameter for fitting H7/g6; μ = 0.3.*
8 *Jamming angle for various fittings; D = 100 mm, μ = 0.3.*

HOLLAND INNOVATIVE JOINS ECP² PROGRAM

The ECP² program (European Certified Precision Engineering Course Program) that was launched late last year, building on the Certified Precision Engineer program initiated by DSPE, has recently been expanded with two courses provided by Holland Innovative: Greenbelt Design for Six Sigma, and RF1 Life Data Analysis and Reliability Testing.

Holland Innovative (founded in 2006, now more than 30 employees) specialises in project management, product and process development and reliability engineering for a broad range of customers. Founder Hans Meeske: "I am driven by my passion for open innovation. Open innovation entails connecting, sharing and together achieving results that matter. In this way we want to improve the quality of life. This includes robust products that add real value to people's lives. It also applies to the well-being of employees and the opportunity for people to develop."

Holland Innovative's training curriculum has been developed in close cooperation with renowned European universities and research institutes. Cindy Camp, Program Manager: "For me it is important that we not only transfer knowledge in our Academy, but that we also secure this knowledge at our customers after the training. We do this with coaching and support in projects and by educating the next generation of trainers at our clients."

New products and processes need to be developed within an increasingly shorter time, first time right and with the right quality and reliability requirements. In order to keep abreast of this it is important to think deeply about the products even in the design phase. They need to be as reliable as possible, have the potential to be brought to the market quickly, and, above all, they need to meet the expectations and requirements of the customer.

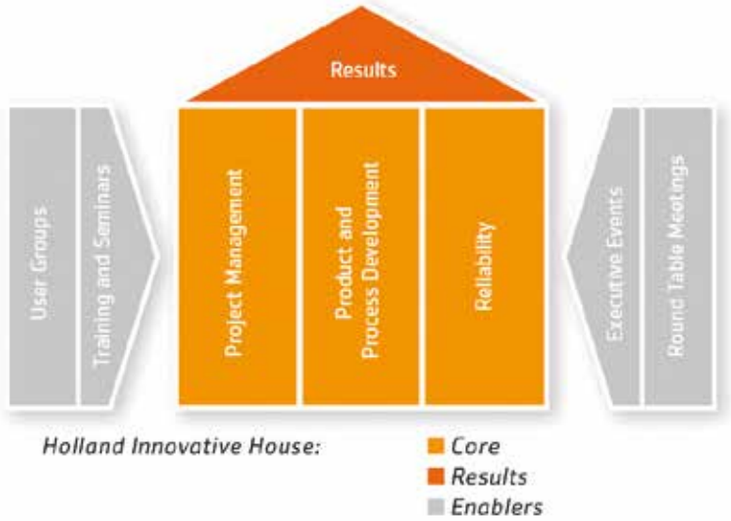

On the basis of proven statistics, Holland Innovative has built a 'house' that rests on three pillars: Project management, Design for Six Sigma and Design for Reliability. This house ensures the optimisation of the product development process and provides training and coaching of project managers, engineers and developers.

Design for Six Sigma Green Belt is a six-day training for engineers who are engaged in projects aimed at both development and improvement of products, processes and services. After attending this course the participants will be able to run (small) improvement projects according to the Six Sigma methodology and assist the DfSS Black Belt in larger projects. The focus on customer demand and the proactive way of collecting data leads to better products.

The participants of the course RF1 Life Data Analysis and Reliability Testing are trained to be professional reliability engineers who are able to make in-depth reliability analyses based on warranty, field or test data, including failure forecasting and to make well-grounded management recommendations.

For the full CPE² course calendar, see page 38.

WWW.HOLLANDINNOVATIVE.NL

Precision-in-Business day at Tegema

On Thursday 22 September 2016, a Precision-in-Business day will be organised for DSPE and YPN (Young Precision Network) members at Tegema in Son, near Eindhoven, the Netherlands. Tegema is a multidisciplinary engineering company that develops, innovates and realises processes and systems from idea until functional model, prototype or (pre-)production series.

The theme of the PiB day is "Stretching the boundaries for high-precision assembly" and presentations will cover femtoliter dispensing, system architecture and high-end optics. A tour of the facilities in included. Registration on the DSPE site.

WWW.DSPE.NL/CENTRAAL/EVENTS/PIB-VISITS-TEGEMA

ECP² COURSE CALENDAR

COURSE (content partner)	ECP² points	Provider	Starting date (location, if not Eindhoven, NL)
FOUNDATION			
Mechatronics System Design - part 1 (MA)	5	HTI	10 October 2016
Mechatronics System Design - part 2 (MA)	5	HTI	31 October 2016
Design Principles	3	MC	26 September 2016
System Architecting (Sioux)	5	HTI	14 November 2016
Design Principles Basic (SSvA)	5	HTI	22 November 2016
Motion Control Tuning (MA)	6	HTI	30 November 2016
ADVANCED			
Metrology and Calibration of Mechatronic Systems (MA)	3	HTI	22 November 2016
Actuation and Power Electronics (MA)	3	HTI	11 October 2016
Thermal Effects in Mechatronic Systems (MA)	3	HTI	28 November 2016
Summer school Opto-Mechatronics (DSPE/MA)	5	HTI	4 July 2016
Dynamics and Modelling (MA)	3	HTI	12 December 2016
Summer School Manufacturability	5	LiS	7 November 2016
Green Belt Design for Six Sigma	4	HI	28 September 2016 5 October 2016 (Enschede, NL)
RF1 Life Data Analysis and Reliability Testing	3	HI	14 November 2016
SPECIFIC			
Applied Optics (T2Prof)	6.5	HTI	1 November 2016
Applied Optics	6.5	MC	15 September 2016
Machine Vision for Mechatronic Systems (MA)	2	HTI	29 September 2016
Electronics for Non-Electronic Engineers – Basics Electricity and Analog Electronics (T2Prof)	6	HTI	10 October 2016
Electronics for Non-Electronic Engineers – Basics Digital Electronics (T2Prof)	4	HTI	5 September 2016
Modern Optics for Optical Designers (T2Prof)	10	HTI	9 September 2016
Tribology	4	MC	1 November 2016 (Utrecht, NL) 14 March 2017
Design Principles for Ultra Clean Vacuum Applications (SSvA)	4	HTI	-
Experimental Techniques in Mechatronics (MA)	3	HTI	to be planned
Advanced Motion Control (MA)	5	HTI	7 November 2016
Advanced Feedforward Control (MA)	2	HTI	14 November 2016
Advanced Mechatronic System Design (MA)	6	HTI	to be planned
Finite Element Method	5	ENG	in-company only
Design for Manufacturing – Design Decision Method	3	SCHOUT	in-company

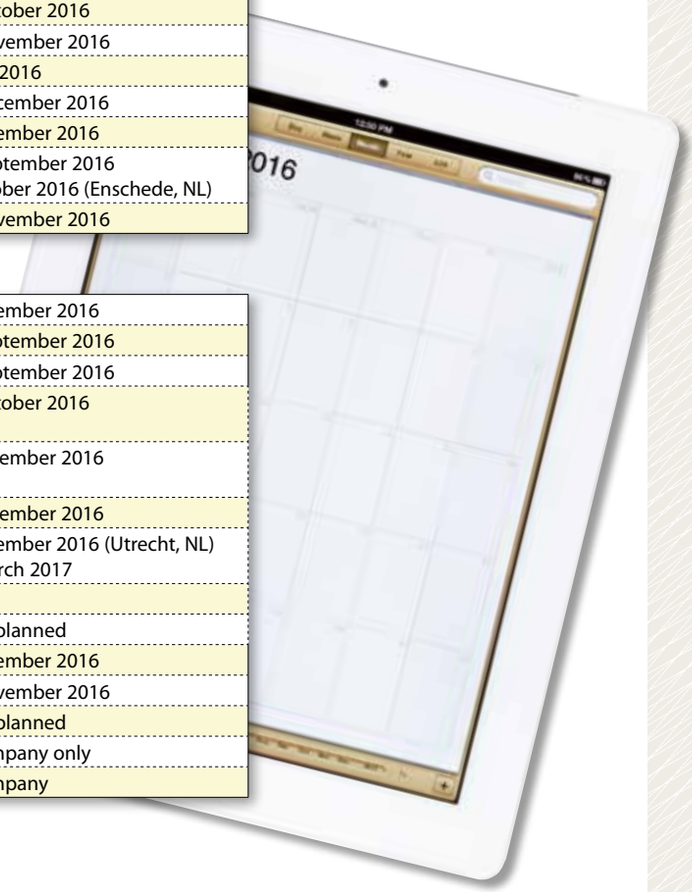

ECP² program powered by euspen

The European Certified Precision Engineering Course Program (ECP²) has been developed to meet the demands in the market for continuous professional development and training of post-academic engineers (B.Sc. or M.Sc. with 2-10 years of work experience) within the fields of precision engineering and nanotechnology. They can earn certification points by following selected courses. Once participants have earned a total of 45 points, they will be certified. The ECP² certificate is an industrial standard for professional recognition and acknowledgement of precision engineering-related knowledge and skills, and allows the use of the ECP² title.

ECP2EU.WPENGINE.COM

Course providers

- Engenia (ENG)
  WWW.ENGENIA.NL
- The High Tech Institute (HTI)
  WWW.HIGHTECHINSTITUTE.NL
- Mikrocentrum (MC)
  WWW.MIKROCENTRUM.NL
- LiS Academy (LiS)
  WWW.LISACADEMY.NL
- Schout DfM (SCHOUT)
  WWW.SCHOUT.EU
- Holland Innovative (HI)
  WWW.HOLLANDINNOVATIVE.NL

Content partners

- Dutch Society for Precision Engineering (DSPE)
  WWW.DSPE.NL
- Mechatronics Academy (MA)
  WWW.MECHATRONICS-ACADEMY.NL
- Settels Savenije van Amelsvoort (SSvA)
  WWW.STTLS.NL
- Sioux
  WWW.SIOUX.EU
- Technical Training for Professionals (T2Prof)
  WWW.T2PROF.NL

AWARD FOR **FOUNDER OF MECHATRONICS** IN THE NETHERLANDS

Jan van Eijk, former CTO of Mechatronics at Philips Applied Technologies and Emeritus Professor of Advanced Mechatronics at the Delft University of Technology (TU Delft), has received the Martin van den Brink Award. This system architecture award is an initiative of DSPE. Jan van Eijk is the founder of mechatronics in the Netherlands and an unorthodox thinker. He has contributed to innovations at Philips and spin-offs such as ASML, has dedicated himself to teaching mechatronics, and places a lot of emphasis on interdisciplinary collaboration and soft skills.

The success of the Dutch high-tech industry is partly thanks to thinking in terms of system architecture. At a high level of abstraction, system architecture describes the design for a complex machine that is usually made up of multiple modules. The system architect is responsible for the main design and coordinates the contributions of all the disciplines involved. He ensures that the different modules, which are mostly built and nowadays also co-developed by suppliers, are combined to create one optimally functioning machine.

Martin van den Brink

The most successful exponent of system architecture thinking is the Veldhoven-based company ASML, which was spun off from Philips in 1984 and is now the global leader in lithography machines. Lithography is the crucial production step that determines the performance of semiconductor chips. It is partly thanks to ASML's machines that we have tablets, smartphones and other high-tech electronic products today. Since ASML's start in 1984, Martin van den Brink, its current President and Chief Technology Officer, has played an important role in the development of lithography machines.

Award

To highlight the importance of system architecture, the Martin van den Brink Award was established in 2012 thanks to an initiative from DSPE, TNO, Brainport Industries, High Tech Systems Platform, Point-One and High Tech Campus Eindhoven. The first award was presented that same year to Erik Loopstra, system architect at ASML. For the second edition of the award, DSPE, in collaboration with Brainport Industries, organised a gala dinner on the evening of Thursday 26 May at the Evoluon in Eindhoven as part of the Dutch Technology Week. Martin van den Brink, after whom the award was named, presented the award to Professor Jan van Eijk for his services to Dutch mechatronics and his contributions to system architecture thinking.

Jan van Eijk

More than 30 years ago, after completing his Ph.D. at TU Delft, Jan van Eijk (1951) emerged as the founder and designer of mechatronics in the Netherlands. Back then, he worked at Philips CFT (Centre for Manufacturing Technologies, later Philips Applied Technologies, and now Philips Innovation Services). His final position at Philips was Vice President & CTO of Mechatronics at Philips Applied Technologies. After that, he started his own

consultancy firm MICE bv (Mechatronic Innovation & Concept Engineering) in 2007. From 2000 onwards, he was a part-time Professor of Advanced Mechatronics at TU Delft until he retired in 2012. That year, he was honoured with the Life Time Achievement Award by euspen (European Society for Precision Engineering & Nanotechnology).

Mechatronics

Mechatronics is based on the combination and integration of disciplines such as mechanics, electronics and software. The multidisciplinary field of mechatronics is essential for the design of complex systems with high-speed and precision control. Van Eijk has made significant contributions to many mechatronics-based innovations at Philips. Building on this, he also contributed to crucial steps of innovation at ASML, among others, especially in the area of precision movements.

Source of inspiration

Jan van Eijk was and still is an unorthodox thinker, who always comes up with surprising alternatives and challenges the technological status quo. He has been a source of inspiration for a whole generation of mechatronic engineers who had the privilege of taking their first steps in this field under his inspiring leadership. Right from the start he placed strong emphasis on broadening the technological scope, interdisciplinary collaboration and soft skills. During the award ceremony this was underlined with anecdotes presented by friends and former colleagues.

Adrian Rankers, Managing Partner of Mechatronics Academy, presented the lesson Van Eijk learned at Philips: "Do not simply do what the customer asks you to do, but do what he would have asked, if he had had more time to think about it." Jelm Franse, Senior Director Mechanical Development at ASML, recollected how Van Eijk at Philips CFT ("Center for Fun & Technology") combined the introduction of revolutionary concepts with a non-conformist attitude. Emeritus Professor Rien Koster talked about Van Eijk's contributions to precision mechatronics. Leo Sanders, owner of MI-Partners, described Van Eijk in football terms as a striker, the player who is enterprising, full of surprises, unpredictable and sharp, who dares to wander off the beaten track and, ultimately, scores the winning goal.

As the initiator of internal Philips conferences, Van Eijk stimulated the exchange of mechatronics knowledge.

1 *Impressions of the Martin van den Brink Award gala dinner event. (Photos: Mijntje Wijzenbeek)*

Following this, in 2012, he co-initiated the DSPE Conference on precision mechatronics, which will see its third edition this autumn. Within Philips, he was the driving force behind the famous mechatronics courses. He still contributes to these courses, which are now offered to an international audience under the umbrella of The High Tech Systems Institute and Mechatronics Academy.

In recognition of all these accomplishments, the judging panel honoured Jan van Eijk with the Martin van den Brink Award 2016 on behalf of DSPE. The judging panel consisted of Jos Benschop (ASML), Pieter Kappelhof (DSPE), Adrian Rankers (Mechatronics Academy), Hans Krikhaar (DSPE) and Martin van den Brink (ASML).

Lively society

In his word of thanks, Jan van Eijk stressed the importance of keeping a balance between forethought and afterthought when designing the system architecture in precision engineering projects: "Use knowledge as well as intuition, accept risks and errors. Don't make easy things difficult – do not scare your customers."
He paid tribute to the initiator of the award, DSPE. Once a dull association, now under the impetus of its president (since 1999!), Hans Krikhaar, a prime example of 'forethought', DSPE is a lively society with a wide variety of activities, stated Jan van Eijk. The Martin van den Brink Award gala dinner proved this and had no less than 180 guests from high-tech companies and universities of technology. ■

2 *Jan van Eijk receives the Martin van den Brink Award 2016. From left to right Martin van den Brink (President and CTO ASML), Jan van Eijk, Hans Krikhaar (President DSPE) and Jos Benschop (Senior Vice President Technology ASML).*

How to select a CMM?

The selection of the right CMM – regarding specific accuracy and application requirements – for process control and quality assurance in high-end manufacturing is a critical decision. Hexagon Metrology provides some guidelines.

The first criterion is the minimum required measuring range, which usually depends on the dimensions of the part to be measured. But often it is more complex than that, for example, when the use of probe extensions or fixtures is required. Therefore, it is wise to consider choosing a machine whose X, Y and Z measuring ranges are twice the width, length and height of the largest part to be measured.

A second criterion is the minimum required uncertainty. The uncertainties and test procedures for CMMs are described in ISO 10360-2, which is becoming a world standard. However, some CMM manufacturers use other performance standards, such as CMMA, VDI/VDE 2617, B89, and JIS. ISO 10360-2, in force since 1994, specifies two uncertainties, the volumetric length measuring uncertainty (*E*) and the volumetric probing uncertainty (*R*).

To verify a CMM's volumetric length measuring uncertainty, a series of gage blocks or a step gage can be used. The user selects seven locations (position and direction) within the CMM's measuring volume, for each of which five material standards (lengths) are measured three times each. For the total of 105 measurements, 100 percent must be within the stated tolerance specified by the manufacturer.

A precision sphere between 10 mm and 50 mm is used to verify a CMM's probing uncertainty. The test consists of measuring 25 equally spaced points on the sphere. *R* is computed by adding the absolute values of the minimum and maximum deviation from the radial form.

These tests are very specific both in definition and execution. A CMM's uncertainty under actual operating conditions can be larger than stated on the manufacturer's specifications because of the use of probe extensions, long or slender probes, rotary tables, revolving probe heads, temperature changes, and airborne contaminants in the shop. For example, most workpieces require complex probe configurations for which *E* and *R* are not specified.

Because of these differences, the generally accepted practice is to apply a ratio of uncertainty to tolerance when calculating a required CMM specification. This ratio may vary widely depending on the factors described above, the complexity of the measurement task and the process itself. Typical ratios range from 1:3 to 1:20, with 1:5 and 1:10 being the most common.

Last year, Hexagon Metrology introduced the Global EVO CMM, tailored to offer high throughput.

On almost all workpieces, CMMs must inspect three groups of tolerances: on diameter and distance, position, and form.
An analysis of the required uncertainty must be performed for each group. For diameter and distance tolerances, locate the diameter for distances with the tightest tolerances. Because of the length dependency of volumetric uncertainty, a larger tolerance on a very long feature may present more difficulty than a very tight tolerance on a small feature. Since position tolerances usually define a tolerance diameter, only the radius is used to determine the deviation from the nominal centre. Form tolerances include call outs for roundness, flatness, straightness, cylindricity, and profile form.

The uncertainty of every CMM depends to a great extent on environmental conditions, such as temperature (variations) and floor vibration. Consequently, CMM manufacturers usually specify the temperature range and variation (per hour, day, meter). It is important to have a complete seismic vibration study performed at the preferred installation site if vibration might become an issue.

All CMM manufacturers provide software for basic measuring routines. Some also provide software for parts with more complex geometries such as bevel gears, impellers, screw compressors, and hob cutters to name a few. Check the complexity of the measuring routines.

Throughput requirements are also a consideration. Acceleration and the number of probing points per minute are the factors that determine overall throughput. Throughput can also be increased by special fixturing arrangements, such as pallet inspection of parts.

HEXAGONMI.COM/SOLUTIONS/TECHNICAL-RESOURCES/TECHNICAL-ARTICLES/HOW-TO-SELECT-A-CMM

High-quality rotary encoders avoid form error

Flawless surfaces are a frequent goal in the machine tool industry, particularly in mould making. If milling already delivers high surface definition, subsequent costs incurred through manual polishing, for example, can be avoided. A crucial factor is the measuring technology used. In addition to linear and angle encoders, the rotary encoders in the servo motors of a machine tool's feed axes can have a significant influence on the quality of milled surfaces. Examinations made by Heidenhain show that among other things the interpolation error of the axis encoders used might be responsible for undesirable, periodically recurring form errors of the workpiece surface.

Mould making necessitates workpieces with ever more complex geometries; their manufacture requires all possible combinations of axis motion during 5-axis machining. If an inclined or curved machining surface is manufactured through the interpolation of multiple NC axes, the interpolation error can be seen directly on the workpiece. This becomes particularly apparent when an inclined surface with a small angle is machined.

The interpolation error in one signal period of the encoder in Z-direction can become visible by projection on the inclined workpiece surface (see the figure). Because of the inclination, an *n*-fold stretching of the signal period appears in the tool path. While the axis in Z-direction moves by only one signal period, the X-axis moves *n* times more. A wave appears on the inclined workpiece surface with a wavelength that corresponds to the *n*-fold signal period of the Z-axis encoder.

The set-up of a controlled linear feed axis usually comprises a servo motor, the ball screw, the axis structure and the axis measuring technology. A linear encoder determines the position of the axis structure. The servo motor's rotary encoder delivers the actual value signal for the axis speed control. Both linear encoders and rotary encoders have interpolation errors.

Tests were done with a high-performance machine tool and mould-making machine. In all linear axes, it was equipped with accurate Heidenhain linear encoders featuring an interpolation error of significantly less than ±100 nm; they did not cause any visible surface waves. Therefore, the form error measured in the tests came from the influence of the interpolation errors of the rotary encoder. In order to be able to separate the effects of the machining process and the movement of the tool centre point, a Heidenhain grid encoder was used. The grid encoder permitted, prior to machining, the non-contacting determination of the contouring deviations between the tool centre point and machine table in the plane of the two moved feed axes.

The Z axis of the machine is relevant for the observation. The rotary encoder of the servo motor is varied on the Z axis. Two mounting-compatible rotary encoders were used, each with 2,048 graduations on the circular scale. Rotary encoder 1 had an interpolation error three times higher than that of rotary encoder 2. The interpolation error of rotary encoder 1 caused waves with a wavelength of about 1.5 mm, which are visible as undesirable shadows (see the figure). The contouring deviations previously determined with the grid encoder measurements led to an obviously inferior surface quality on the workpiece. The change to rotary encoder 2 with a three-times lower interpolation error – and otherwise identical conditions – resulted in a significant improvement of the surface quality. Thanks to the lower interpolation error of the rotary encoder, no regular surface waves are visible.

WWW.HEIDENHAIN.COM

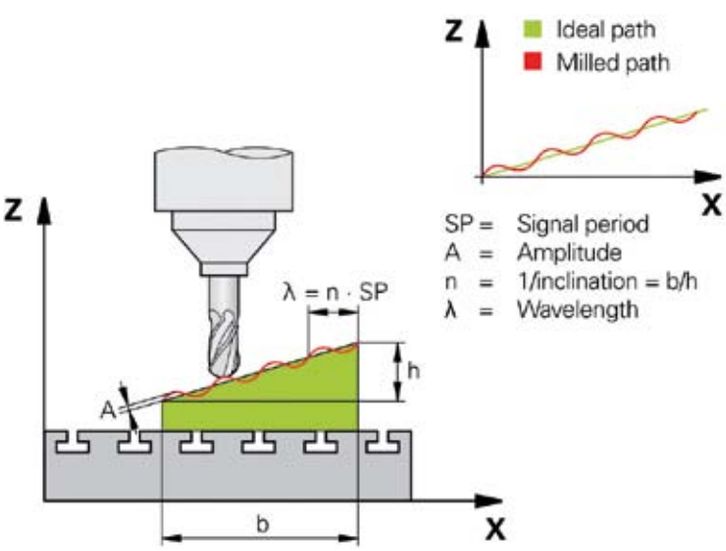

Interpolation error and resulting wave on an inclined workpiece surface.

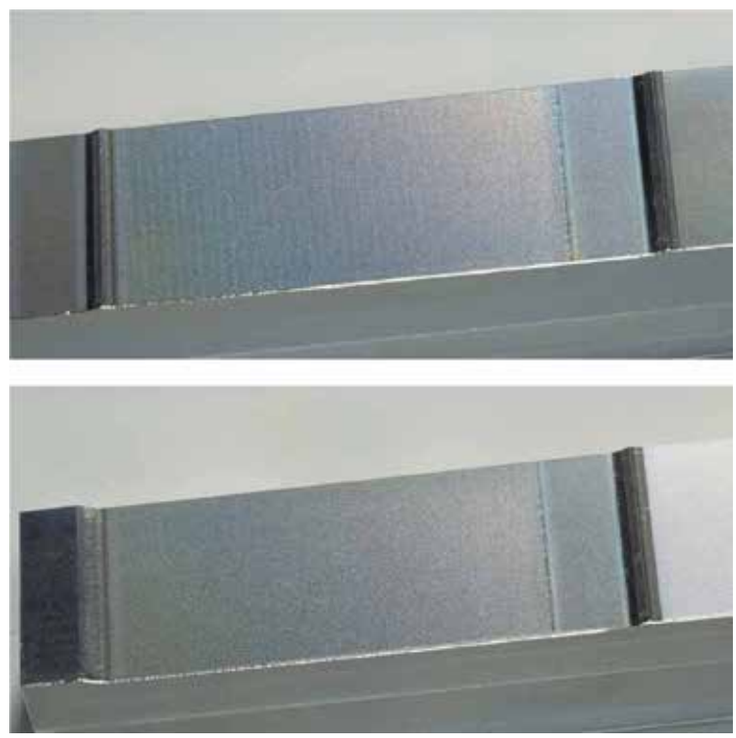

Surface with undesirable shadows through rotary encoder 1 (top) and 'perfect' surface through rotary encoder 2 (bottom).

New optics for real-time cancer diagnosis

EU-financed research has resulted in the development of non-invasive optical imaging systems for rapid ex-vivo and in-vivo tissue analysis with a high potential for breast, head and neck cancer treatment.

Cancer diagnosis depends on a long-term and complex tissue examination process. At present, real-time tissue diagnosis is not possible during surgery. As a result, additional operations (in up to 40% of the cases) are needed. In the process of cancer treatment, especially with tumour biopsy and tumour removal, the present pre-operative and operative imaging does not provide a reliable diagnosis. What is more, the complete pathological diagnosis, usually based on (histological) section preparation, is only available after a number of days. For this reason, a substantial number of patients must undergo a second biopsy or operation.

The FFOCT microscope and the integrated high-speed, high-sensitivity camera (insert).

The European CAReIOCA project has combined the latest developments in CMOS camera technology and optical biopsy imaging for Full-Field Optical Coherence Tomography (FFOCT). This cooperation has resulted in the development of two innovative optical imaging methods:

- A high-speed FFOCT microscope for the non-destructive quality control of ex-vivo biopsies within several minutes.
- A FFOCT endoscope for in-vivo operations and guidance of biopsies on cell level.

The cooperation between LLTech, specialised in the development and production of FFOCT imaging equipment, CMOSIS and Adimec, experts in the field of sensor and camera development, respectively, has led to an important technological breakthrough. For FFOCT imaging, a specific camera has been developed which achieves a ten times higher sensitivity than conventional cameras, with a 1 kHz frame rate. By integrating this camera into the FFOCT equipment, the recording speed has been increased fivefold. Furthermore, development of new FFOCT optics, compatible with a medical optical probe, has led to a first FFOCT endoscope.

Both the new FFOCT microscope and the FFOCT endoscope have been evaluated at the Leiden University Medical Center (LUMC), the Netherlands, and at the Gustave Roussy Institute (Villejuif, France). The focus was on the detection of breast cancer and head and neck cancer, which led to very good results in comparison with the standard tissue analysis and 'frozen section' techniques. The LUMC has also produced very promising FFOCT images of ovary tissue, displaying sufficiently usable information without resulting in tissue damage, as happens with the present techniques. This research demonstrates the potential added value of FFOCT imaging in the clinical realm of ovary tissue transplantation. FFOCT endoscopy performed on head and neck biopsies by the Gustave Roussy Institute has revealed the potential of in-situ imaging of small structural characteristics in tissue.

Within the compass of CAReIOCA, three technological aspects have been successfully evaluated: the high-speed camera, the CMOS sensor and the FFOCT microscope. All three of these are almost ready for introduction in the market (scheduled for 2016 and 2017). Although the camera and the sensors are specified for FFOCT imaging, they can also be used in other interferometric systems in the medical and industrial sectors.

WWW.CAREIOCA.EU
WWW.ADIMEC.NL
WWW.LLTECHIMAGING.COM
WWW.LUMC.NL
WWW.GUSTAVEROUSSY.FR
WWW.CMOSIS.COM

NTS-Group opens second factory in Singapore

NTS-Group, the supplier of opto-mechatronic modules and systems with headquarters in Eindhoven, the Netherlands, recently opened a second factory in Singapore, NTS Mechatronics Singapore. This company will be responsible for engineering and assembling modules and systems in the Singapore region and will work closely with NTS Components Singapore, an existing company that specialises in the production of high-precision frames and sheet metalwork.
Marc Hendrikse, CEO of NTS-Group: "We already had significant knowledge and experience of co-design and assembly, but were being forced to relocate mechanical assembly activities because of growth in the current sheet metalwork factory. The need to launch the new company was also confirmed by demand from clients wanting the possibility to outsource in a cleanroom environment at module level." The new factory features a metrological department with a brand new Mitutoyo measuring machine. The 350 m^2 cleanroom is class 10,000 and contains a special booth for class 100, which is state-of-the-art for module assembly.

WWW.NTS-GROUP.NL

Precision Mechatronic System Design and Control

On April 20-22 of this year, the 5th ASPE Spring Topical Meeting on Precision Mechatronic System Design and Control was held on the campus of the Massachusetts Institute of Technology (MIT), Cambridge, MA, USA. The co-chairpersons David Trumper (MIT), Stephen Ludwick (Aerotech), Jan van Eijk (MICE bv) and Dannis Brouwer (University of Twente), together with the ASPE conference team, did a great job in organising an intimate and focused conference and the nice warm, sunny weather was the icing on the cake.

The opening tutorial "The Dutch approach to High Performance Motion Control" by Maarten Steinbuch (Eindhoven University of Technology) and Adrian Rankers (Mechatronics Academy) addressed fundamental principles, lessons learnt and recent developments. With 55 of the 90 conference participants attending, it was well attended and according to the feedback and vivid interaction during the lectures and breaks, it was well received.

The conference programme included a very unique keynote speech by Rainer Weiss (MIT) about the measurement challenges of the Laser Interferometer Gravitational-Wave Observatory (LIGO), which is designed to measure gravitational waves – tiny distortions of space-time that were first predicted by Einstein in 1916. Rainer Weiss (born in 1932) is one of the founding fathers of the project and was also one of the four scientists presenting at the press conference for the announcement that the first direct gravitational-wave observation had been made on 14 September 2015, just two days after the Advanced LIGO detectors started collecting data after a system upgrade. For this achievement, in 2016, he received the Special Breakthrough Prize in Fundamental Physics, the Gruber Prize in Cosmology, the Shaw Prize and the Kavli Prize in Astrophysics together with Kip Thorne and Ronald Drever.

In his fascinating and very clear presentation, Weiss shared the passion and huge challenges that needed to be tackled in order to finally, after more than 40 years, reach a measurement sensitivity that was actually sufficient to reach the initial goal. In a later presentation, Fabrice Matichard (MIT) elaborated on the complex control architecture of LIGO (see his article in the previous Mikroniek issue). Besides the presentations, a tour of the local LIGO facility with additional presentations and a visit to the extreme vibration isolation systems were also organised.

The second keynote, by Maarten Steinbuch, addressed the disruptive changes that the world is facing due to the enormous increase in computational power, which has been predicted and pushed by Moore's Law and which in itself, is enabled by the enormous progress that precision engineers active in the development of semiconductor equipment are achieving. The exponential increase in computing power drives areas like artificial intelligence, robotics and autonomous driving, to name just a few, and has already resulted in disruptive changes in industry.

The 22 presentations and the various technical/commercial posters showed a good mix of R&D work by specialists and practitioners from academia, industry and government with focus on precision design and control of mechatronic (motion) systems. A broad view was given on the thematic challenge to transform the sometimes vaguely defined accuracy required by the various applications into the correct performance specifications for precision and control engineering.

Although application areas and scales greatly differ, there was a common ground in the continuing effort to increase precision by reducing inaccuracies induced by effects like remote sensing, hysteresis, external vibrations and elasticity in lightweight structures, while limiting or even reducing cost and complexity. This common focus and the resulting joint technical basis and interest of all participants, stimulated and fuelled very interesting and vivid discussions during the sessions and all breaks.

The 5th ASPE Spring Topical Meeting was held on the MIT campus.

The Dutch in general, and the Dutch high-tech community in particular, have a reputation of being networkers and travellers, so it is not surprising that, next to some participants from other countries, the Netherlands was represented by a delegation of ten participants and was involved in four of the 22 presentations.

(Report by Adrian Rankers and Wouter Hakvoort)

ASPE.NET/TECHNICAL-MEETINGS/PAST-ASPE-MEETINGS/SPRING-2016

Connect 2 Cleanrooms opens offices in the Netherlands

UK-based Connect 2 Cleanrooms, the expert in modular cleanrooms, has made its first move to the continent by opening offices in Utrecht, the Netherlands. After having served Dutch customers in recent years from HQ in Lancashire, Connect 2 Cleanrooms now offers them the benefits of full expertise and support nearby. Joe Govier, CEO of Connect 2 Cleanrooms, sees lots of potential for his company: "The Netherlands is a breeding ground for an innovative, high-tech precision industry, with highly advanced facilities and appealing R&D."

Connect 2 Cleanrooms offers anything from a large bespoke hardwall cleanroom split into localised zones with temperature control, to a small softwall cleanroom or laminar flow cabinet. The company also provides training, service and cleanroom validation.

WWW.CONNECT2CLEANROOMS.NL

New, accessible book on materials technology

Why are chinaware, drinking glasses and metal cutlery dry when taking them out of the dishwasher, while plastic cups remain wet? Is a LED-lamp really the reverse of a solar cell? Why does data travel faster through a glass fibre than through a copper wire? And how can you make glass or ceramics more fracture-resistant? The answers to these and other questions can be found in the new book "Kennismaken met materialen – materiaalkunde voor niet-materiaalkundigen".

"Kennismaken met materialen" is special in the way that it makes materials technology accessible to non-technical people who are working with(in) technical companies and organisations, without compromising on the content. To this end, many examples from our daily life are presented: materials in cars and planes, for energy generation, in our computer or smartphone, in & around the house, etc.

Metal, plastic, ceramics, composite, natural or artificial... a wide variety of materials is presented in this book. But also: how do they cope with heat, light, electricity and mechanical loads? This book gives a clear answer to questions like "why is this material suitable for that application" and "which knobs have to be turned to get better materials, if the current ones do not satisfy".

E. Brinkman, "Kennismaken met materialen – materiaalkunde voor niet-materiaalkundigen", ISBN 978-90-79926-00-8, Betase (www.betase.nl), 192 pages, Dutch language

The information in this book can be well employed to understand and follow new material developments. And there are a lot of developments: graphene, plastics for flexible electronics, self-healing materials, nano-technology, 3D-printing and biobased materials play a (sometimes minor) role in this book. Currently, this book is only available in the Dutch language; an English release "Meeting materials – materials technology for non-technical people" is planned at the end of this year.

WWW.MATERIALEN.EU (PREVIEW AND ORDERING)

High-precision, compact optical encoders

Faulhaber has expanded its portfolio with the high-precision IER3 and IERS3 encoders. Both encoders deliver 2-channel quadrature signals and an additional index signal. The encoders are highly precise thanks to the optical measuring principle. A Faulhaber DC-micromotor or brushless DC-servomotor can be positioned with a typical accuracy of 0.1-0.3° with these encoders, which are therefore suited for high-precision positioning applications.

The encoders are exceptionally compact and light in comparison to other optical encoders. The encoder is designed as an opto-reflective system in a single-chip solution: the LED, photodetectors, analysis unit and interpolation levels are installed in one chip.

WWW.FAULHABER.COM

Frencken to manufacture and industrialise care robot

System supplier Frencken, based in Eindhoven, the Netherlands, is taking on the industrialisation and manufacture of the Lean Elderly Assistant (LEA), developed by the Dutch company Robot Care Systems. The high-tech robot is to provide care for elderly people with reduced mobility and for Alzheimer's and Parkinson's patients.

The Lean Elderly Assistant (LEA) robot.

LEA enables people to live at home independently for longer and can also reduce the workload for (professional) care-givers.

The robot is equipped with sensors that help to keep an eye on the client; it can invite the client to walk or dance with it if they have been sitting still for too long and it can also raise the alarm if it senses that the client is lying on the floor. When taking a walk, the robot avoids obstacles and provides exactly the right support for the client in order to prevent them from falling. LEA is currently still in the testing phase and will be tested in trials in five European countries this year.

WWW.FRENCKEN.NL

New linear piezo-driven stages

PI (Physik Instrumente) presents the N-565 linear stage series fitted with piezoelectric stepping drives. The drive principle enables repeatability in the range of a few nanometers, high guiding accuracy, and high force in a single compact unit. The linear stages are therefore suited for positioning, for example, samples, optics or mechanical components in microscopy, in the semiconductor industry, for laser set-ups or for applications in a vacuum.

The stages have a width of 65 mm, a height of only 20 mm, and work with travel ranges of 13, 26 or 52 mm. Depending on the travel range, the length is 80, 110, and 160 mm, respectively. As a measuring system for position control, PI uses an internally developed optical linear encoder that is based on an integrated Mach-Zehnder interferometer. This measuring principle enables a resolution of 0.5 nm and a minimum incremental motion of 2 nm.

The piezoelectric drive is self-locking; if the target position is reached or the system is switched off, the positioning unit maintains the position without current and without generating heat. The holding force of the positioning stage is 10 N, the maximum velocity is 10 mm/s. The high guiding accuracy is achieved by crossed-roller bearings with forced guiding.

WWW.PI.WS

ASML to acquire HMI

ASML, a leading provider of lithography systems for the semiconductor industry, based in Veldhoven, the Netherlands, and Taiwan-based Hermes Microvision, Inc. (HMI), a leading supplier of pattern verification systems used for advanced semiconductor devices, recently announced that they have entered into an agreement under which ASML will acquire all outstanding shares of HMI.

The two companies are already developing joint approaches that IC manufacturers can use to improve yields in the production of the most advanced microchips. The integrated offerings will address the challenges chip makers are facing as they enter sub-10 nm resolutions and 3D integration, requiring chip manufacturers to apply advanced process control. This requires very dense, high-resolution metrology to measure and control device performance, whereas 3D integration requires very dense, high-voltage contrast metrology for process control.

HMI has multiple years of e-beam application experience and leadership in semiconductor factories, focused on high resolution and voltage contrast imaging. HMI will continue to enhance these technologies and it will also boost ASML's holistic lithographic portfolio of 1) lithography exposure systems, 2) computational lithography, and 3) metrology.

WWW.ASML.COM
WWW.HERMES-MICROVISION.COM

TNO and TU/e co-found European top centre for 3D-printing

In the Netherlands, TNO and the High Tech Systems Center of Eindhoven University of Technology (TU/e) are starting a knowledge centre for additive manufacturing that is intended to be a leading centre for R&D at the European level. In contrast to other knowledge centres in this field, the new initiative focuses predominantly on the production equipment for smart, personalised and multi-functional products. Part of the plan is a new TU/e chair and research group, 'Systems Mechatronics for Advanced Manufacturing'.

One of the goals of the new knowledge centre is to stimulate the competitiveness and growth of Dutch industry. It wants to collaborate intensively on R&D with industry, the aim being to have tens of industrial partners participating in research programs in the coming years. The centre will undertake fundamental and applied research to arrive at innovations that ultimately make it to the marketplace via the affiliated companies or spin-offs that are created. The centre will also train experts and scientists that the emerging 3D-printing industry needs.

Additive manufacturing has real potential for all kinds of products of complex shapes and made from one piece. Moreover, the products can easily be adjusted to the wishes of individual customers and intelligence can be built in. The technology for more complex products, made from different materials for example, is still in its infancy, however. The researchers of the new centre will focus on developing high-tech equipment for the production of smart products that are typically manufactured from several materials. The findings will be tested in practice in the Dutch Smart Industry Fieldlab MultiM3D.

The high-tech equipment will be largely targeted at making integrated and smart electronics, customised medical products, printed food, and pharmaceutical and high-tech products. Examples are complete implants, prostheses, dental bridgework, smart electronics like E-pills, smart connectors and integrated LEDs or spare parts for high-tech equipment that can be printed on the spot when needed.

WWW.TNO.NL
WWW.TUE.NL/HTSC

Towards a space-based gravitational wave observatory

Recently, the LISA Pathfinder team announced that results from only two months of science operations show that the two cubes at the heart of the spacecraft are falling freely through space under the influence of gravity alone, unperturbed by other external forces, to a precision more than five times better than originally required. The test masses are almost motionless with respect to each other, with a relative acceleration lower than 1 part in ten millionths of a billionth of Earth's gravity.

This opens the door to the development of a large space observatory capable of detecting gravitational waves emanating from a wide range of exotic objects in the Universe. Sophisticated technologies are needed to register the minuscule changes induced by gravitational waves. They were directly detected for the first time only in September 2015 by the ground-based Laser Interferometer Gravitational-Wave Observatory (LIGO); read the article in the April issue of Mikroniek.

The signals seen by LIGO have a frequency of around 100 Hz, but gravitational waves span a much broader spectrum. In particular, lower-frequency oscillations are produced by, for example, the mergers of supermassive black holes. To detect these events and fully exploit the new field of gravitational astronomy, it is crucial to open access to gravitational waves at low frequencies between 0.1 mHz and 1 Hz. This requires measuring tiny fluctuations in distance between objects placed millions of kilometres apart, something that can only be achieved in space, where an observatory would also be free of the seismic, thermal and terrestrial gravity noises that limit ground-based detectors.

LISA Pathfinder – an ESA (European Space Agency) mission with important contributions from its member states and NASA – was designed to demonstrate key technologies needed to build such an observatory. A crucial aspect is placing two test masses in freefall, monitoring their relative positions as they move under the effect of gravity alone. Even in space this is very difficult, as several forces, including the solar wind and pressure from sunlight, continually disturb the cubes and the spacecraft. Thus, in LISA Pathfinder, a pair of identical, 2 kg, 46 mm gold–platinum cubes, 38 cm apart, fly, surrounded, but untouched, by a spacecraft whose job is to shield them from external influences, adjusting its position constantly to avoid hitting them.

LISA Pathfinder was launched on 3 December 2015, reaching its operational orbit roughly 1.5 million km from Earth towards the Sun in late January 2016. The mission started operations on 1 March and the first two months of data show that, in the frequency range between 60 mHz and 1 Hz, LISA Pathfinder's precision is only limited by the sensing noise of the laser measurement system used to monitor the position and orientation of the cubes.

WWW.ESA.INT

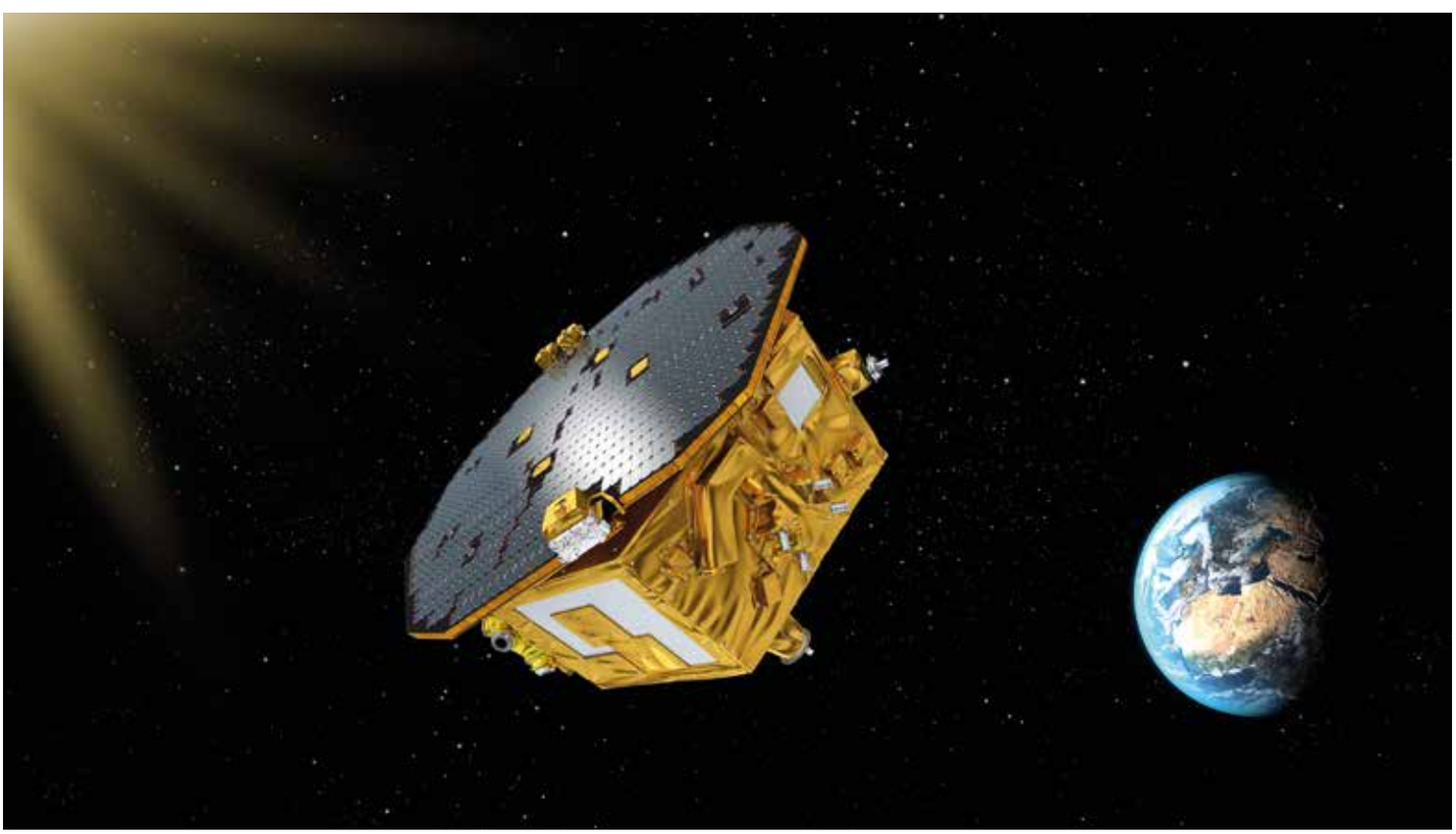

Artist's impression of LISA Pathfinder, ESA's mission to test technology for future gravitational-wave observatories in space. (Copyright ESA, C. Carreau)

High-dynamic linear piezo nanopositioning stages

Aerotech presents the QNPHD linear piezo nanopositioning stages which provide the benefits of both a stage and actuator in one compact, high-stiffness package. With a direct-metrology, capacitive sensor feedback option, high resonant frequencies, and high load capacity, the QNPHD is suited for a wide range of high-speed and high-precision applications such as scanning probe microscopy, disc-drive testing, and semiconductor wafer articulation.

A direct-drive actuation design and optimised structure enable millisecond response and move-and-settle times for closed-loop travels from 10 µm to 40 µm. Precision flexures ensure high-stiffness, long device life, and high dynamics while maintaining geometric performance (straightness and angular errors) for critical nanopositioning applications. Optional closed-loop feedback using a unique capacitive sensor design allows for sub-nanometer resolution and single-digit nanometer linearity errors. The capacitive sensors measure the output of the positioning carriage directly, enabling superior accuracy and repeatability.

WWW.AEROTECH.COM

Development

TNO
T + 31 (0)88-866 50 00
W www.tno.nl

TNO is an independent innovation organisation that connects people and knowledge in order to create the innovations that sustainably boosts the competitiveness of industry and wellbeing of society.

member DSPE

Development and Engineering

ACE ingenieurs- & adviesbureau
werktuigbouwkunde en elektrotechniek BV
Dr. Holtroplaan 46
Postbus 7030, 5605 JA Eindhoven
5652 XR Eindhoven
T +31 (0)40 - 2578300
F +31 (0)40 - 2578397
E info@ace.eu
W www.ace.eu

ACE has developed into a leading engineering and consultancy firm with a strong focus on mechanics and mechatronics. Services include conceptualization, development, engineering and prototyping.

member DSPE

Development and Engineering

SEGULA Technologies Nederland BV develops advanced intelligent systems for the High Tech and Automotive industry. As a project organisation, we apply our (engineering) knowledge to non-linear systems. This knowledge is comprised of systems architecture and modelling, analysis, mechanics, mechatronics, electronics, software, system integration, calibration and validation.

Segula Technologies Nederland B.V.
De Witbogt 2
5652 AG Eindhoven
T +31 (0)40 8517 500
W www.segula.nl

member DSPE

Education

Leiden school for Instrument-makers (LiS)
Einsteinweg 61
2333 CC Leiden
The Netherlands
T +31 (0)71-5681168
F +31 (0)71-5681160
E info@lis.nl
W www.lis.nl, www.lisacademy.nl

The LiS is a modern level 4 MBO school, with a long history (founded in 1901). The school encourages establishing projects in close cooperation with industry and scientific institutes, allowing for high level "real life" work. Under the name LiS-Engineering and LiS-Academy the school accepts contract work and organizes education for others.

member DSPE

PAO Techniek en Management

De Bouwcampus
TU Delft, gebouw 26
Van der Burghweg 1
2628 CS Delft
Postbus 5048
2600 GA Delft
T +31 (0)15-2784618
E info@paotm.nl
W www.paotm.nl

Electrical Discharge Machining (EDM)

Ter Hoek Vonkerosie
Propaanstraat 1
7463 PN Rijssen
T +31 (0)548 540807
F +31 (0)548 540939
E info@terhoek.com
W www.terhoek.com

INNOVATION OF TOMORROW, INSPIRATION FOR TODAY
Staying ahead by always going the extra mile. Based on that philosophy, Ter Hoek produces precision components for the high-tech manufacturing industry.

We support customers in developing high-quality, custom solutions that can then be series-produced with unparalleled accuracy. That is what makes us one of a kind.
It is in that combination of innovative customization and repeated precision that we find our passion. Inspired by tomorrow's innovation, each and every day.

member DSPE

Lasers, Light and Nanomotion

Laser 2000 Benelux C.V.
Voorbancken 13a
3645 GV Vinkeveen
Postbus 20, 3645 ZJ Vinkeveen
T +31(0)297 266 191
F +31(0)297 266 134
E info@laser2000.nl
W www.laser2000.nl

Laser 2000 Benelux considers it her mission to offer customers the latest photonics technologies available.
Our areas of expertise are:

- Lasers, scanners and laser machines for industry and research
- Light metrology instruments for LED and luminaire industries
- Light sources for scientific applications
- Piezo- and stepper motion products for nano- and micro positioning
- Inspection and research grade high speed cameras
- Laser safety certified products

3D Measurement Services

Mitutoyo BeNeLux

Showroom België
Hogenakkerhoekstraat 8
9150 Kruibeke
T +32 (0)3 254 04 44
E info@mitutoyo.be
W www.mitutoyo.be

Showroom Nederland
Wiltonstraat 25
3905 KW Veenendaal
T +31 (03) 185 34 911
E info@mitutoyo.nl
W www.mitutoyo.nl

W www.mitutoyo-benelux.com

Unmatched expertise in measurement!
Mitutoyo BeNeLux: your guarantee for proactive sales support, continuous knowledge transfer and ongoing maintenance services.

We make it visible.

Carl Zeiss
Industrial Metrology
Trapezium 300
3364 DL Sliedrecht
T +31 (0)184 433 551
F +31 (0)184 433 500
E m.trupia@zeiss.nl
W www.zeiss.nl

Carl Zeiss Industrial Metrology is the world's leader in CNC coordinate measuring machines and complete solutions for multidimensional metrology in the metrology lab and production environment. We also provide contract programming and contract measuring in our Measuring House near Eindhoven (NL).

Mechatronics Development

centre for concepts in mechatronics

CCM Centre for Concepts in Mechatronics
De Pinckart 24
5674 CC Nuenen
T +31 (0)40 2635000
F +31 (0)40 2635555
E info@ccm.nl
W www.ccm.nl

CCM translates technology into technique.
Commitment, motivation, education and skills of our employees are the solid basis for our business approach.

member DSPE

CREATING MACHINES TOGETHER

Manufacturing Technical Assemblies (MTA) b.v.
Waterbeemd 8
5705 DN Helmond
T +31 (0)492 474992
F +31 (0)492 474510
E info@m-t-a.nl
W www.m-t-a.nl

MTA is an high-tech system supplier specialized in the development and manufacturing of mechatronic machines and systems.
Our clients are OEM s in the Packaging, Food, Graphics and High-tech industries.

Mechatronics Development

MI-Partners
Dillenburgstraat 9N
5652 AM Eindhoven
The Netherlands
T +31 (0)40 291 49 20
F +31 (0)40 291 49 21
E info@mi-partners.nl
W www.mi-partners.nl

MI-Partners is active in R&D of high-end mechatronic products and systems. We are specialised in concept generation and validation for ultra-fast (>10g), extremely accurate (sub-nanometers) or complex positioning systems and breakthrough production equipment.

member DSPE

Metal Precision Parts

Etchform BV
Arendstraat 51
1223 RE Hilversum
T +31 (0)35 685 51 94
F info@etchform.com
W www.etchform.com

Etchform is a production and service company for etched and electroformed metal precision parts.

member DSPE

Micro Drive Systems

Maxon Motor Benelux

The Netherlands

Head Office
maxon motor benelux bv
Josink Kolkweg 38
7545 PR Enschede

South
High Tech Campus 9
5656 AE Eindhoven
T +31(053) 744 0 744
E info@maxonmotor.nl
W www.maxonmotor.nl

Belgium / Luxembourg

maxon motor benelux bv
Schaliënhoevedreef 20C
2800 Mechelen - Belgium
T +32 (15) 20 00 10
F +32 (15) 27 47 71
E info@maxonmotor.be
W www.maxonmotor.be

maxon motor is the worldwide leading supplier of high precision drives and systems. When it really matters! Try us.

member DSPE

Micro Drive Systems

FAULHABER Benelux B.V.
Drive Systems
High Tech Campus 9
5656 AE Eindhoven
The Netherlands
T +31 (0)40 85155-40
E info@faulhaber.be
E info@faulhaber.nl
W www.faulhaber.com

FAULHABER specializes in the development, production and deployment of high-precision small and miniaturized drive systems, servo components and drive electronics with output power of up to 200 watts. The product range includes brushless motors, DC micromotors, encoders and motion controllers. FAULHABER also provides customer-specific complete solutions for medical technology, automatic placement machines, precision optics, telecommunications, aerospace and robotics, among other things.

Physik Instrumente (PI)
Benelux BV
Hertog Hendrikstraat 7a
5492 BA Sint-Oedenrode
The Netherlands
T +31 (0)499-375375
F +31 (0)499 375373
E benelux@pi.ws
W www.pi.ws

PI is the world's leading provider of nanopositioning products and systems. All key technologies are developed, manufactured and qualified in-house by PI: Piezo components, actuators and motors, magnetic drives, guiding systems, nanometrology sensors, electronic amplifiers, digital controllers and software.

member DSPE

Micromachining

Reith Laser bv
Bijsterhuizen 24-29
6604 LK Wijchen
The Netherlands
T +31 (0)24 3787564
F +31 (0)24 3787586
E info@reithlaser.nl
W www.reithlaser.nl

For more than 22 years Reith Laser bv is the leading supplier of laserprocessed products in Europe. We can offer you a great diversity of lasermaterialprocessing activities:

- Laser- (micro-) cutting
- Laser drilling
- Laser welding
- Laser micromachining

Reith Laser is active in precision industry, medical industry, aerospace, semiconductor- and automotive industry.

Motion Control Systems

Aerotech United Kingdom
The Old Brick Kiln
Ramsdell, Tadley
Hampshire RG26 5PR
UK
T +44 (0)1256 855055
F +44 (0)1256 855649
W www.aerotech.co.uk

Motion Control Systems

Newport Spectra-Physics B.V.
Vechtensteinlaan 12 - 16
3555 XS Utrecht
T +31 (0)30 6592111
E netherlands@newport.com
W www.newport.com

Newport Spectra-Physics BV, a subsidiary of Newport Corp., is a worldwide leader in nano and micropositioning technologies.

member DSPE

Physik Instrumente (PI)
Benelux BV
Hertog Hendrikstraat 7a
5492 BA Sint-Oedenrode
The Netherlands
T +31 (0)499-375375
F +31 (0)499 375373
E benelux@pi.ws
W www.pi.ws

PI is the world's leading provider of nanopositioning products and systems. All key technologies are developed, manufactured and qualified in-house by PI: Piezo components, actuators and motors, magnetic drives, guiding systems, nanometrology sensors, electronic amplifiers, digital controllers and software.

member DSPE

Motion Control Systems

Reliance Precision Ltd
Florijnstraat 20
4879 AH Etten-Leur
T +31 (0)76-5040790
E sales@reliance.co.uk

- Positioning systems
- Drives
- Mechatronic Assemblies
- Intelligent Motion Control

Reliance Precision Ltd manufactures, assembles and tests precise motion control solutions for high-accuracy applications.

Optical Components

Molenaar Optics
Gerolaan 63A
3707 SH Zeist
Postbus 2
3700 AA Zeist
T +31 (0)30 6951038
F +31 (0)30 6961348
E info@molenaar-optics.nl
W www.molenaar-optics.eu

member DSPE

Optics and Imaging

Focal Vision & Optics
Institutenweg 25A
7521 PH Enschede
T +31 (0)53 - 428 7880
E info@focal.nl
W www.focal.nl

Focal Vision & Optics provides services for optical system design and advanced image processing. We design and deliver custom made and high speed precision inspection systems to OEMs and industrial manufacturers.

member DSPE

Piezo Systems

HEINMADE BV
Heiberg 29C
NL - 5504 PA Veldhoven
T +31 (0)40 851 2180
E info@heinmade.com
W www.heinmade.com

HEINMADE develops and supplies piezo system solutions for mainly precise positioning. Check our standard amplified piezo actuators and nanostages. As distributor of Noliac a wide variety of piezo actuators are offered.

member DSPE

Piezo Systems

Physik Instrumente (PI) Benelux BV
Hertog Hendrikstraat 7a
5492 BA Sint-Oedenrode
The Netherlands
T +31 (0)499-375375
F +31 (0)499 375373
E benelux@pi.ws
W www.pi.ws

PI is the world's leading provider of nanopositioning products and systems. All key technologies are developed, manufactured and qualified in-house by PI: Piezo components, actuators and motors, magnetic drives, guiding systems, nanometrology sensors, electronic amplifiers, digital controllers and software.

member DSPE

Precision Cutting

Dutch Precision Technology (DPT)
Postbus 2600
3430 GA Nieuwegein
Einsteinbaan 1
3439 NJ Nieuwegein
T +31 (0)30 605 33 44
E dpt@metaalunie.nl
W www.dptech.nl.nl
Twitter:
www.twitter.com/verspaners

Dutch Precision Technology (DPT) is the principal association for precision cutting in the Netherlands. The companies affiliated with DPT guarantee expertise, quality, flexibility and effective cooperation. DPT has top specialists for all kinds of precision processes, combined with options for assembling parts into composites and/or complete systems or products.

Ultra-Precision Metrology & Engineering

IBS Precision Engineering
Esp 201
5633 AD Eindhoven
T +31 (0)40 2901270
F +31 (0)40 2901279
E info@ibspe.com
W www.ibspe.com

IBS Precision Engineering delivers world class measurement, positioning and motion systems where ultra-high precision is required. As a strategic engineering partner to the world's best manufacturing equipment and scientific instrument suppliers, IBS has a distinguished track record of proven and robust precision solutions. Leading edge metrology is at the core of all that IBS does. From complex carbon-fibre jet engine components to semiconductor chips accurate to tens of atoms; IBS has provided and engineered key enabling technologies.

member DSPE

ADVERTISERS INDEX

- Demcon — 17
  www.demcon.nl
- DSPE — Cover 2
  www.dspe.nl
- Heidenhain Nederland BV — Cover 4
  www.heidenhain.nl
- Maxon Motor — 26
  www.maxonmotor.nl
- Mikrocentrum — Cover 3
  www.mikrocentrum.nl / www.precisionfair.com
- Mikroniek Guide — 50-53
- NTS-Group — 26
  www.nts-group.nl
- Punch Powertrain — 49
  www.punchpowertrain.com
- Segula Technologies Nederland BV — 41
  www.segula.nl
- TU Delft — 11
  www.jobsindelft.com

mikrocentrum
training • events • business

Join us!

Precision Fair 2016

THE meeting point for precision technology!

- New technologies, solutions and products
- Exhibition of 300 specialised companies and knowledge institutions
- Over 50 inspiring lectures
- Including international Meet & Match Events
- Big Science / Big Business

www.precisionfair.com

16th edition
Free entrance

Trade fair & Conference

Wednesday 16 and Thursday 17 November 2016
NH Conference Centre Koningshof Veldhoven, The Netherlands

With the support of:

Dutch Precision Technology · DutchHTS Gateway to Dutch High Tech · DSPE YOUR PRECISION PORTAL · Holland High Tech · Brainport Industries · FME CWM · enterprise europe network.nl